PLANNING COMMISSION WORK SESSION & MEETING
Zoom Webinar and Town Council Chamber
3 S. Timber Ridge Parkway, Severance, CO 80550

AGENDA
PLANNING COMMISSION WORK SESSION & MEETING 2022-XX
Wednesday, June 15, 2022, at 6:00 PM

A. CALL TO ORDER

1. Roll Call

2. Pledge of Allegiance

3. Approval of Agenda

4. Public Comment

The purpose of the Public Comment is for members of the public to speak to the Planning Commission on any subject not scheduled on the agenda. To accomplish scheduled agenda items, comments should be limited to three minute for those attending in person or an appropriate time as deemed by the Chair. The Planning Commission shall make no decisions or take action on comments, but may choose to schedule the matter for a decision later. Those addressing the Planning Commission, please state your name and address.

5. Approval of Minutes

a. 4.20.22 Minutes

B. REGULAR MEETING

1. Special Use Review - 121 W 2nd Ave

- Legislative
- Staff Presentation: Abdul Barzak, Town Planner

2. Multi-Family Requirements: Land Use Code

- Legislative
- Staff Presentation: Abdul Barzak, Town Planner

C. COMMUNICATIONS

Commission approval may be sought for administrative actions in association with staff reports.

1. Town Attorney
2. Town Staff

3. Town Management
4. Commission Members
5. Chair

D. ADJOURN

Planning Commission MEETING
Wednesday, June 15, 2022, 6:00 PM (MDT)

Registration URL
https://us02web.zoom.us/webinar/register/WN_OCx-DpESRiaIWI915_tEgg

PLANNING COMMISSIONMEETING
Regular Meeting
3 S. Timber Ridge Parkway, Severance, CO 80550

MINUTES
REGULAR MEETING 2022-04PC
Wednesday, April 20, 2022 – 6:00 p.m.

Chair: Julie Stout

Vice-Chair: Dan Meyers

Commissioners Present: Derek Grimes
Joe Pirrone
Zach Goodell

Absent: Justin Swartz

Staff Present:
Nicholas Wharton, Town Manager
Lindsay Radcliff-Coombes, Deputy Town Manager
Abdul Barzak, Planner

Audience: None

A. CALL TO ORDER 6:00 pm

1. **Roll Call**

2. **Pledge of Allegiance**

3. **Approval of Agenda**

MOTION WAS MADE BY COMMISSIONER GRIMES, second by Commissioner Goodell, to Approve the agenda as presented. All Commission members present voting **YES,**

MOTION PASSED

4. **Public Comment:**
   - None

5. **Approval of Minutes**
   - Regular Meeting Minutes 2022-02PC 2.16.22

MOTION WAS MADE BY COMMISSIONER PIRRONE, second by Commissioner Goodell, to approve Regular Meeting Minutes 2021-08PC 10.20.21. All Commission members present voting **YES,**

MOTION PASSED

B. REGULAR MEETING

1. **Civic Clerk Training**
   - Training
   - Staff Presentation: Jesse Porquis, Civic Clerk

2. **Land Use Discussion**
   - Discussion
   - Staff Presentation: Abdul Barzak, Town Planner

C. COMMUNICATIONS
- Town Planner
- Town Manager

MOTION WAS MADE BY COMMISSIONER GRIMES, second by Commissioner Goodell, to approve the removal of Commissioner Swarts based on lack of attendance. All Commission members present voting Y**ES,**

MOTION PASSED

D. ADJOURN
-Meeting adjourned at 6:56 pm

TOWN OF SEVERANCE
PLANNING
COMMISSION

_____
Commissioner Julie Stout, Chair

ATTEST:

_____
Leah Vanarsdall, Town Clerk

AGENDA ITEM SUMMARY

AGENDA ITEM	SUBMITTED BY	PRESENTED BY
Special Use Review - 121 W 2nd Ave	Abdul Barzak, Town Planner	Abdul Barzak, Town Council

ACTION REQUESTED

Community Development and Management ask that the Planning Commission review, discuss, and forward a recommendation to the Town Council on the Special Use Review at 121 W. 2nd Avenue. Actions that may be taken:

1. Forward a recommendation of approval to the Town Council the Special Use Review at 121 W. 2nd Avenue.
2. Take No Action.

Report
Action Requested

BRIEF SUMMARY

The owner of 121 W. 2nd Avenue is asking for a Special Use Review to construct a personal shop on this lot. The shop is a 36 foot by 80 foot metal building that will be used as personal work and office space. The proposed building will not have water or sewer at this time. The applicant has provided building, site, and landscape plans which can be found in the packet.

PUBLIC SUPPORT/CONCERN

None at this time.

ANALYSIS AND RECOMMENDATION

Town staff is asking for the Planning Commission to forward a recommendation of approval to the Town Council for the proposed Special Use Review at 121 W. 2nd Avenue.

MATERIALS SUBMITTED

The following materials were submitted and included in this packet:

1. Letter of Intent
2. Building Plans
3. Plot Plan for Packet
4. Landscape Plan
5. Grading Plan
6. Lighting Narrative
7. Applicant Narrative (Response to staff comments)
8. Severance Planning Review
9. Engineering Review Comments
10. Combined Referral Comments 6.6.22

Bruce Peck
429 Whitney Harbor
Windsor, CO 80550
brucelpeckjr@yahoo.com
808-256-8480

01/25/2022

Letter of Intent for NSN 2nd Ave Severance, CO Building Project

Town Board and Planners,

I m submitting this review package for approval of my building project at NSN 2nd Ave in Severance. I intend to build a 36 foot by 80 foot metal building with an open inside design. It will have rollup door entrances on 2nd Ave and on the alley behind the lot. It will have also have a walk in door and window facing the 2nd ave entrance. It is two tone metal with overhang, gutter and paved floor, and paved drives to both side and will have a paved walkway around the west facing side. Insulated, and wired for 110 and 220 volt applications. It will have a multi color front with a 3 ft wainscot edge along the lower part of the building. It will built on one foot concrete frost walls, not on slab, and the floor will be poured concrete. It will be rough plumbed for possible future hookup to sewer/water. I plan to put in a conforming metal fence with gates around the property and fill in the reming landscape areas with washed rock/etc , and nothing requiring water or irrigation.

I intend to use this building for personal work and office space, with the potential to convert it to possible commercial/personal use in the future.

Thank you,

Bruce Peck

GENERAL NOTES

1.1 Fabrication shall be in accordance with R.G.B. standard practices in compliance with the applicable sections, relating to design requirements and allowable stresses of the latest edition of the "AWS Structural Welding Code D1.1 and D1.3". R.G.B. manufacturing procedures are certified by:

Reference	Certification numbers
Houston	R.G.B. #456

1.2 MATERIALS

	ASTM DESIGNATION	MIN. YIELD STRENGTH
Hot Rolled Steel Shapes (W, S, C & L)	A572/A529	Fy = 50 KSI
Hot Rolled Steel Shapes (W)	A992	Fy = 50 KSI
Round Structural Tubing (HSS)	A500	Fy = 42 KSI
Square/Rect. Structural Tubing (HSS)	A500	Fy = 46 KSI
Structural Steel Web Plate	A572/A1011	Fy = 55 KSI
Structural Steel Flange Plates/Bars	A529/A572	Fy = 55 KSI
Cold Formed Light Gage	A653/A1011	Fy = 55 KSI
Roof and Wall Sheets	A792/A653	Fy = 50, 80 KSI
Cable Brace	A475	Extra High Strength
Rod Brace	A36	Fy = 36 KSI
		MIN. TENSILE STRENGTH
Machine Bolts & Nuts	A307	Fu = 60 KSI
High Strength Bolts (1"ø and less)	F3125 / Gr.A325	Fu = 120 KSI
High Strength Bolts (>1"ø to 1 1/2"ø)	F3125 / Gr.A325	Fu = 105 KSI
Anchor Bolts (if supplied)	A36/A307/F1554 Gr.36	Fu = 58-80 KSI

1.3 PRIMER
Shop primer paint is a rust inhibitive primer which meets the end performance of Federal Specification SSPC No. 15 and is R.G.B. Red or Gray Oxide color. This paint is not intended for long term exposure to the elements. R.G.B. is not responsible for any deterioration of the shop primer paint as a result of improper handling and/or jobsite storage. R.G.B. shall not be responsible for any field applied paint and/or coatings. (Section 6.5 AISC Code of Standard Practice, 16th Edition). Nominal thickness of primer will be 1 mil unless otherwise specified in contract documents.

1.4 GALVANIZED OR SPECIAL COATINGS:
See Contract Documents

1.5 ALL BOLTS ARE 1/2"ø x 0'-1" A307 (snug-tightened) EXCEPT :
a) Eave strut connection - 1/2"ø x 0'-1 1/4" A307 without washer (unless noted otherwise)
b) Endwall rafter splice - 5/8"ø x 0'-1 3/4" F3125 / Gr.A325 with washer
c) Endwall column to rafter connection - 1/2"ø x 0'-1 1/4" F3125 / Gr. A325 without washer
d) Main frame moment splice connections - F3125 / Gr.A325 with washer,
SEE CROSS SECTION for dimensions.
NOTE: One (01) washer is supplied on main frame moment splice and to F3125 / Gr.A325 bolts unless noted otherwise on drawing

1.6 F3125 / Gr.A325 BOLT TIGHTENING REQUIREMENTS
All high strength bolts are F3125 / Gr.A325 unless specifically noted otherwise. Structural bolts shall be tightened by the turn-of-the-nut or calibrated wrench methods in accordance with the 16th Edition AISC/RCSC "Specification For Structural Joints using ASTM F3125/Gr.A325 or A490 Bolts". Washers are supplied separately from High Strength Bolts, however, assembly with washers are required before erection. Installaltion inspection is recommended and be based on Section 9.1 and 9.2 of AISC/RCSC.

Snug-tight is permitted EXCEPT for the following conditions:
a) Building located in high seismic areas; Seismic Design Categories D, E, F
b) Building supporting cranes
c) Building supporting machinery that creates vibration, impact or stress reversal
d) Connections using ASTM A490
e) Connections using slip-critical condition
f) or as prohibited in the contracts/specifications

1.7 CLOSURE STRIPS ARE FURNISHED FOR APPLICATION:
INSIDE- Under roof panels at eave
OUTSIDE - Between endwall panels and rake trim
- Under continuous ridge vent skirts

1.8 ERECTION NOTE:
All bracing, strapping, & bridging shown and provided by R.G.B. for this building is required and shall be installed by the erector as a permanent part of the structure. If additional bracing is required for stability during erection, it shall be the erector's responsibility to determine the amount of such bracing and to procure and install as needed.

1.9 ERECTION AND UNLOADING NOT BY R.G.B.

1.10 SHORTAGES
Any claims or shortages by buyer must be made to R.G.B. within five (5) working days after delivery, or such claims will be considered to have been waived by the customer and disallowed.

1.11 CORRECTIONS OF ERRORS AND REPAIRS (MBMA 6.10)
Claims for correction of alleged misfits will be disallowed unless R.G.B. shall have received prior notice thereof and allowed reasonable inspection of such misfits. The correction of minor misfits by the use of drift pins to draw the components into line, moderate amounts of reaming, chipping and cutting, and the replacement of minor shortages of material are a normal part of erection and are not subject to claim. No part of the Building may be returned for alleged misfits without the prior approval of R.G.B.

BUYER/END USE CUSTOMER RESPONSIBILITIES

2.1 It is the responsibility of the BUYER/END USE CUSTOMER to obtain appropriate approvals and secure necessary permits from City, County, State, or Federal Agencies as required, and to advise/release R.G.B. to fabricate upon receiving such.

2.2 Rigid Global Buildings (hereafter referred to as R.G.B.) standard specifications apply unless stipulated otherwise in the Contract Documents. R.G.B. design, fabrication, quality criteria, standards, practice, methods and tolerances shall govern the work with any other interpretations to the contrary notwithstanding. It is understood by both Parties that the BUYER/END USE CUSTOMER is responsible for clarification of inclusions or exclusions from the architectural plans and/or specifications.

2.3 In case of discrepancies between R.G.B. structural steel plans and plans for other trades, R.G.B. plans shall govern. (Section. 3 AISC Code of Standard Practices, 16th Edition)

2.4 Approval of R.G.B. drawings and calculations indicates that R.G.B. has correctly interpreted and applied the Contract Documents. This approval constitutes the contractor/owners acceptance of the R.G.B. design concepts, assumptions, and loading. (Section 4 AISC Code 15th Edition and MBMA 3.3.3)

2.5 Once the BUYER/END USE CUSTOMER has signed R.G.B. Approval Package and the project is released for fabrication, changes shall be billed to the BUYER/END USE CUSTOMER including material, engineering and other costs. An additional fee may be charged if the project must be moved from the fabrication and shipping schedule.

RIGID GLOBAL BUILDINGS

DRAWING PACKAGE

SALES NO.	71792	JOB NO.	157132	BUILDING	A
CUSTOMER	Tekton Custom Homes, LLC				
END USER	Bruce Peck				
END USE	Shop				
STREET	201 2nd Ave.				
CITY ST ZIP	Severance, CO 80546				
COUNTY	Weld				

THIS STRUCTURE HAS BEEN DESIGNED IN ACCORDANCE WITH THE FOLLOWING AS INDICATED:

DESIGN LOADS:

Design Code	: IBC 18
Dead Load (psf)	: Metal building structure only by RGB
Collateral Load (psf)	: 0
Wind Load	
Basic Design Wind Speed	: V (3 sec. gust) = 115 mph
Allowable Stress Design Wind Speed	: Vasd (3 sec. gust) = 89.08 mph
Risk Category	: II - Normal
Wind Exposure	: C
Enclosure Classification	: Closed
Internal Pressure Coefficient, GCPi	: 0.180 / -0.180
Design Wind Pressure For Wall	: Based on Allowable Stress Design Wind Speed
Components Wind Pressure (psf)	: 12.96
Components Wind Suction (psf)	: -14.28
Claddings Wind Pressure (psf)	: 15.24
Claddings Wind Suction (psf)	: -16.56
Live Load	
Primary Framing (psf)	: 20.00
Trib. Area Reduction	: Yes
Secondary Framing (psf)	: 20.00
Snow Load	
Ground Snow Load, Pg (psf)	: 43.0
Roof Snow Load, Pf (psf)	: 30.1
Sloped Roof Snow Load, Ps (psf)	: 30.1
Snow Exposure Factor, Ce	: 1.000
Snow Importance Factor, Is	: 1.000
Thermal Factor, Ct	: 1.000
Sloped Factor, Cs	: 1.000
Seismic Load	
Seismic Importance Factor, Ie	: 1.00
Seismic Occupancy Category	: II - Normal
Site Class	: D
Mapped Spectral Response Acceleration	: Ss = 0.166 :S1 = 0.052
Spectral Response Coefficients	: Sds = 0.176 :Sd1 = 0.083
Seismic Design Category	: B
Basic Force Resisting Systems Used	: Steel System Not Specifically Detailed For Seismic Resistance : Rigid Frames : Braced Frames
Total Design Base Shear, V (kips)	: Longitudinal= 2.14 Transverse= 2.14
Response Modification Factors, R	: Rigid Frames = 3.00 : SW X-Bracing = 3.00 : EW X-Bracing = 3.00
Seismic Response Coefficient, Cs	: Rigid Frames = 0.059 : SW X-Bracing = 0.059 : EW X-Bracing = 0.059
Analysis Procedure Used	: Equivalent Lateral Force Procedure
Rainfall Intensity	: 4.00 (in/hr)
Other Loads/Requirements	

BUILDING DESCRIPTION:

Width (ft)	: 36
Length (ft)	: 80
Eave Ht. at BSW (ft)	: 16
Eave Ht. at FSW (ft)	: 16
Roof Slope at BSW	: 4.0:12
Roof Slope at FSW	: 4.0:12
Bay Spacing (ft)	: 4 at 20

COVERING AND TRIMS:

Roof Panels & Trims	
Panel Type	: 26 Ga. PBR
Panel Color	: S2000 Standard
Trim Colors	
Eave Trim	: S2000 Standard
Eave Gutter	: N/A
Gable Trim	: S2000 Standard
Wall Panel & Trims	
Panel Type	: 26 Ga. PBR
Panel Color	: S2000 Standard
Trim Colors	
Corner Trims	: S2000 Standard
Opening Trims	: S2000 Standard
Downspouts	: N/A
Base Trim	: N/A
Mas. Flash	: N/A
Special Requirements	: NONE

FOR PERMIT

Before erecting your building, please see the Rigid Erection & Safety Manual at rigidbuilding.com/document-library

2.6 The BUYER/END USE CUSTOMER is responsible for overall project coordination. All interface, compatibility, and design considerations concerning any materials not furnished by R.G.B. and R.G.B. steel system are to be considered and coordinated by the BUYER/END USE CUSTOMER. Specific design criteria concerning this interface between materials must be furnished before release for fabrication or R.G.B. assumptions will govern (Section 4 and Commentary, AISC Code of Standard Practice, 16th Edition)

2.7 It is the responsibility of the BUYER/END USE CUSTOMER to ensure that R.G.B. plans comply with the applicable requirements of any governing building authorities. The supplying of sealed engineering data and drawings for the metal building system does not imply or constitute an agreement that R.G.B. or its design engineers are acting as the engineer of record or design professional for a construction project. These drawings are sealed only to certify the design of the structural components furnished by R.G.B.

2.8 The BUYER/END USE CUSTOMER is responsible for setting of anchor bolts and erection of steel in accordance with R.G.B. "For Construction" drawings only. Temporary supports such as guys, braces, falsework, cribbing or other elements required for the erection operation shall be determined furnished and installed by the erector. No items should be purchased from a preliminary set of drawings, including anchor bolts. Use only final "FOR CONSTRUCTION DRAWINGS" for this use. (Section 7 AISC Code of Standard Practice, 16th Edition.)

2.9 Rigid Global Buildings is responsible for the design of the anchor bolt to permit the transfer of forces between the base plate and the anchor bolt in shear, bearing and tension, but is not responsible for the transfer of anchor bolt forces to the concrete, anchor bolt embedment or the adequacy of the anchor bolt in relation to the concrete.
Unless otherwise provided in the Order Documents, R.G.B. does not design and is not responsible for the design, material and construction of the foundation or foundation embedments. The END USE CUSTOMER should assure himself that adequate provisions are made in the foundation design for loads imposed by column reactions of the building, other imposed loads, and bearing capacity of the soil and other conditions of the building site.
It is recommended that the anchorage/anchor bolt embedment and foundation of the building be designed by a Registered Professional Engineer experienced in the design of such structures. (Chapter IV Section 3.2.2 Metal Building Systems Manual 18th Edition)

2.10 Normal erection operations include the corrections of minor misfits by moderate amounts of reaming, chipping, welding or cutting, and the drawing of elements into line through the use of drift pins. Errors which cannot be corrected by the foregoing means or which require major changes in member configuration are to be reported immediately to R.G.B. by the BUYER/END USE CUSTOMER, to enable whoever is responsible either to correct the error or to approve the most efficient and economic method of correction to be used by others. (Section 7 AISC Code of Standard Practice, 16th Edition)

2.11 Neither the fabricator nor the BUYER/END USE CUSTOMER will cut, drill or otherwise alter his work, or the work of other trades, to accommodate other trades, unless such work is clearly specified in the contract documents. Whenever such work is specified, the BUYER/END USE CUSTOMER is responsible for furnishing complete information as to materials, size, location and number of alterations prior to preparation of shop drawings. (Section 7 AISC Code of Standard Practice, 16th Edition)

2.12 WARNING In no case should Galvalume steel panels be used in conjunction with lead or copper. Both lead and copper have harmful corrosive effects on the Galvalume alloy coating when they are in contact with Galvalume steel panels. Even run-off from copper flashing, wiring, or tubing onto Galvalume should be avoided.

2.13 SAFETY COMMITMENT Rigid Global Buildings has a commitment to manufacture quality building components that can be safely erected. However, the safety commitment and job site practices of the erector are beyond the control of R.G.B.
It is strongly recommended that safe working conditions and accident prevention practices be the top priority of any job site. Local, State, and Federal safety and health standards should always be followed to help insure workers safety. Make certain all employees know the safest and most productive way of erecting a building. Emergency procedures should be known to all employees.
Daily meetings highlighting safety procedures are also recommended. The use of hard hats, rubber sole shoes for roof work, proper equipment for handling material, and safety nets where applicable, are recommended.

2.14 Roof drainage systems (gutter, downspouts, etc.) must be free of any obstruction to ensure smooth operation at any given time.

2.15 It is recommended by Factory Mutual (Reference: B2.44) that roofs be cleared of snow when half of the maximum snow depth is reached. The maximum snow depth can be estimated based on the design snow load and the density of snow and/or ice buildup. See Chart below.

ROOF SNOW LOAD (IN PSF)	EQUIVALENT SNOW HEIGHT AT ROOF (IN INCHES)	RECOMMENDED SNOW HEIGHT WHEN SNOW REMOVAL SHOULD START (IN INCHES)
20	16.60	8.30
30	17.90	8.95
40	19.20	9.60
50	20.50	10.25
60	21.80	10.90
70	23.10	11.55
80	24.40	12.20

NOTE:
For Snow/Ice Removal Procedure, Refer to Metal Building Systems Manual 18th Edition, Section A9.4, Page A-59

12/6/21

COLORADO LICENSED
CARLITO M. DAYAG
46701
PROFESSIONAL ENGINEER

SEALING OF THIS DRAWING DOES NOT IMPLY OR CONSTITUTE THAT RIGID GLOBAL ENGINEER IS THE ENGINEER OF RECORD OR THE DESIGN PROFESSIONAL FOR THIS PROJECT. ONLY THE DESIGN OF THE METAL BUILDING SYSTEM AS FURNISHED BY RIGID IS INCLUDED. FOUNDATION ANALYSIS, ELECTRICAL, AND MECHANICAL SYSTEMS, AND/OR OTHER PARTS SUPPLIED BY ANYONE OTHER THAN RIGID ARE SPECIFICALLY EXCLUDED. NO INSPECTION OR SUPERVISION IS IMPLIED.

CUSTOMER:			
Tekton Custom Homes, LLC			
SALES NO.: 71792	JOB NO.: 157132	BUILDING.: A	DWG. NO.: C1

LEGENDS & ABBREVIATIONS

DESIGN:

Accel.	Acceleration
Coeff.	Coefficient
CL, Collat	Collateral Load
DL, Dead	Dead Load
H, Horz, Horiz	Horizontal
L	Left
LL, Live	Live Load
LnWnd, LnWind, LWIND	Longitudinal Wind Load
Min, min	Minimum
Max, max	Maximum
R	Right
SL	Snow Load
Slide	Sliding Snow Load
SEIS, Seis	Seismic Load
U_Snow	Unbalance Snow Load
V, Vert	Vertical
WL, Wind_L	Wind Load Left
WR, Wind_R	Wind Load Right
WP, Wind_P	Wind Pressure
WS, Wind_S	Wind Suction

ENGLISH UNITS

Acre	Acres
FT, ft	Feet
GA, Ga, ga	Gage
Gal	Gallons
IN, in	Inches
K, k	Kips
KSI, ksi	Kips Per Square-Inches
lb, #	Pounds
MPH, mph	Miles Per Hour
PLF, plf, lb/ft	Pounds Per Linear-Foot
PSF, psf, lb/ft^2	Pounds Per Square-Feet
TON, ton	Tons
Yd	Yard

METRIC UNITS

cm	Centimeters
Hec	Hectares
liter	Liters
m	Meters
mm	Millimeters
N	Newtons
km	Kilometers
kN	Kilonewtons
kN/m^2	Kilonewtons Per Square-meter
kPa	Kilopascals
kph	Kilometers Per Hour
Pa	Pascals

USEFUL CONVERSION

English	To	English	Metric	To	Metric
1 mile		1760 Yd	1 km		1000 m
1 Yd		3 Ft	1 m		100 cm
1 Ft		12 in	1 cm		10 mm
1 in		16/16 in	1 kN		1000 N
1 Ton (English)		2 Kips	1 kg		9.8066 N
1 Kip		1000 lb	1 Ton (Metric)		1000 kg
1 lb		16 ounces	1 Hec		10,000 m^2
1 Acre		43560 Ft^2	1 m^3		1000 liter
1 Ft^3		7.4805 Gal	1 kPa		1 kN/m^2

English	To	Metric	Metric	To	English
1 in		2.54 cm	1 cm		0.3937 in
1 ft		0.3048 m	1 m		3.2808 ft
1 lb		0.4536 kg	1 kg		2.2046 lb
1 Ton (English)		907.18 kg	1 Ton (Metric)		2204.6 lb
1 Kip		4.4482 kN	1 kN		0.2248 kip
1 mile		1.6093 km	1 km		0.6213 mile
1 Acre		0.4046 Hec	1 Hec		2.4715 Acres
1 lb/ft^2		0.0478 kPa	1 kPa		20.8854 lb/ft^2

Fraction	To	Decimal	Fraction	To	Decimal
1/16		0.0625	9/16		0.5625
1/8		0.1250	5/8		0.6250
3/16		0.1875	11/16		0.6875
1/4		0.2500	3/4		0.7500
5/16		0.3125	13/16		0.8125
3/8		0.3750	7/8		0.8750
7/16		0.4375	15/16		0.9375
1/2		0.5000	16/16		1.0000

DRAWINGS:

AB, A.B.	Anchor Bolt
AS, As Shown	As Shown
Aux.	Auxiliary
BLDG., Bldg.	Building
B.P., Base PL	Base Plate
BOTT., Bott.	Bottom
Bott. Base PL, B.O.B.P	Bottom Of Base Plate
B.O.S.	Bottom Of Steel
BSW	Back Sidewall
BY OTHERS	By Other Supplier or Not By Rigid
C/C	Center to Center
C.I.P.	Cast-In-Place
CL, ℄	Center Line
CLR.	Clear, Clearance
CMU	Concrete Masonry Unit
COL., Col.	Column
CONC., Conc.	Concrete
CONT.	Continuous, Continuation
DET.	Detail
DIA., Dia., Ø	Diameter
DIM., Dim.	Dimension
DWG., Dwg.	Drawing
EH, E.H.	Eave Height
EJ, Exp. Jt.	Expansion Joint
EL, Elev.	Elevation
EP	End Plate
ES, E.S.	Eave Strut
EW	Endwall
EW COL, EC	Endwall Column
EW RAF	Endwall Rafter
Exp. Bolt	Expansion Bolt
FFL, Fin. Flr.	Finish Floor Line
FLG., FLGE., Flg., Flge.	Flange
FNB, F.N.B.	Fin Neck Bolt
FO, F.O.	Framed Opening
FRM., Frm.	Frame
FSW	Front Sidewall
GA, Ga.	Gage
GALV., Galv.	Galvanized
G.O.L.	Gage of Outstanding Leg
H, Ht.	Height
HED,HEDS	High Eave Double Slope
HES,HESS	High Eave Single Slope
Horz, Horiz	Horizontal
HSB, H.S.B.	High Strength Bolt
HSS	Hollow Structural Section
INT., Int.	Interior, Intermediate
I/S	Inside
LED,LEDS	Low Eave Double Slope
LES,LESS	Low Eave Single Slope
LEW	Left Endwall
LHI	Left Hand In
LHO	Left Hand Out
LL	Long Life
LLH	Long Leg Horizontal
LLV	Long Leg Vertical
LT	Lean-To
LT COL	Lean-To Column
LT RAF	Lean-To Rafter
LG., Lg.	Long
L, Lt.	Length
L x W x H	Length x Width x Height
MAX., max.	Maximum
MIN., min.	Minimum
MKD., MK'D.	Marked
MB, M.B.	Machine Bolt
MEZZ., Mezz.	Mezzanine
N.A., N/A	Not Applicable
NO., No.	Number
NS/FS, NS&FS	Near Side and Far Side
O.C.	On Center
O/S	Outside
OH, Opp Hand	Opposite Hand (Mirror Image)
OHD, O.H.D.	Over-Head Door
O/O	Out to Out
PF COL	Portal Frame Column (Wind Bent Column)
PF RAF	Portal Frame Rafter (Wind Bent Rafter)
PL, ℙ	Plate
QTY., Qty.	Quantity
REF., Ref.	Refer, Reference
REW	Right Endwall

DRAWINGS:

RHB	Round Head Bolt
RHI	Right Hand In
RHO	Right Hand Out
REINF.	Reinforced
REQ'D., REQD.,	Required
REV., Rev.	Revised, Revision
RF, R.F.	Rigid Frame
RF COL	Rigid Frame Column
RF RAF	Rigid Frame Rafter
RUD, R.U.D.	Roll-Up Door
SC	Slip Critical
SDS	Self-Drilling Screws
SECT., Sect.	Section
SHTG., Shtg.	Sheeting
Sol Col	Soldier Column
SP	Splice Plate
SSR	Standing Seam Roof
SST	Stainless Steel
ST COL	Straight Column
STIFF.	Stiffener
STD.	Standard
STS	Self-Tapping Screws
SW	Sidewall
SYM., Sym., SYMM., Symm.	Symmetry, Symmetrical
TBE	To Be Established
TBD	To Be Determined
TC	Tension Control
THK., Thk.	Thick
TOC, T.O.C.	Top Of Concrete
TOS, T.O.S.	Top Of Steel
T & B, TOP & BOTT	Top and Bottom
TYP., Typ., typ.	Typical
UN, U.N.O.	Unless Noted, Unless Noted Otherwise
Vert.	Vertical
WD	Walk Door
W, Wd.	Width
W.P.	Work Point, Working Point

SECTIONS AND DETAILS:

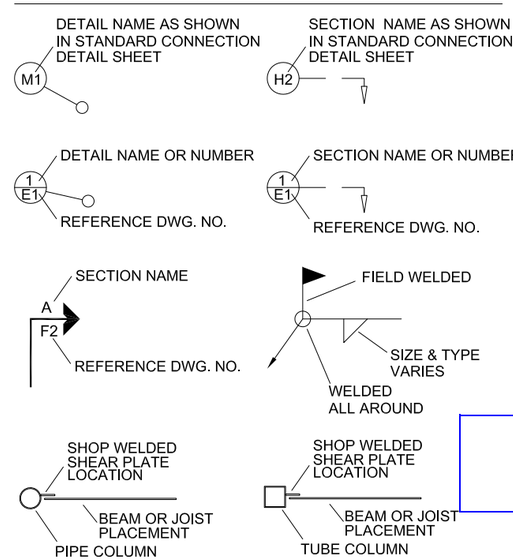

BUILT-UP SECTIONS: USED FOR FRAMES, BEAMS, COLUMNS

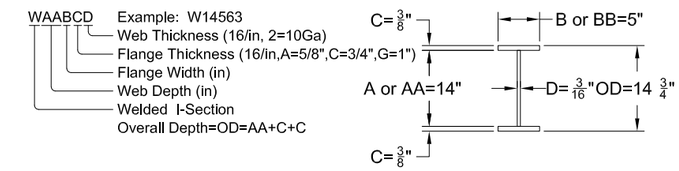

CRANE BEAM SECTIONS: USED FOR RUNWAY BEAMS, MONORAILS

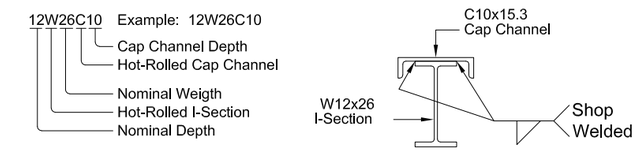

COLD-FORMED SECTIONS Z,C,D: USED FOR PURLINS,GIRTS,JAMBS,JOISTS

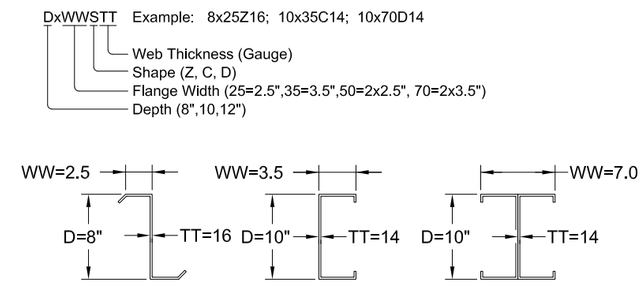

COLD-FORMED SECTION ES: USED FOR EAVE STRUTS

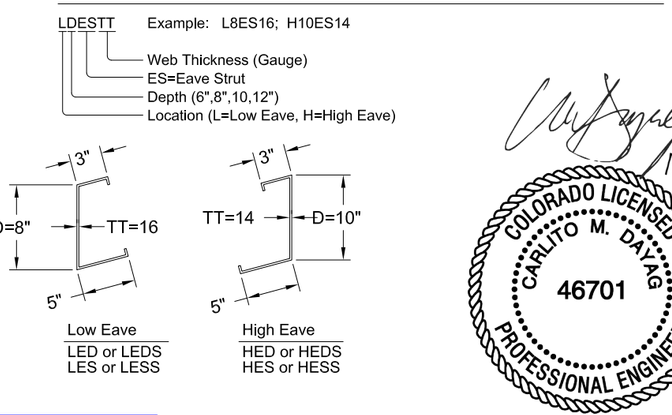

12/6/21

COLORADO LICENSED
CARLITO M. DAYAG
46701
PROFESSIONAL ENGINEER

FOR PERMIT

SEALING OF THIS DRAWING DOES NOT IMPLY OR CONSTITUTE THAT RIGID GLOBAL ENGINEER IS THE ENGINEER OF RECORD OR THE DESIGN PROFESSIONAL FOR THIS PROJECT. ONLY THE DESIGN OF THE METAL BUILDING SYSTEM AS FURNISHED BY RIGID IS INCLUDED. FOUNDATION ANALYSIS, ELECTRICAL, AND MECHANICAL SYSTEMS, AND/OR OTHER PARTS SUPPLIED BY ANYONE OTHER THAN RIGID ARE SPECIFICALLY EXCLUDED. NO INSPECTION OR SUPERVISION IS IMPLIED.

ISSUE	DESCRIPTION	DATE	DRN.	CHK.	DES.
A	PERMIT	12/02/21	MRR	RCR	MRR

RIGID GLOBAL BUILDINGS
18933 Atdine Westfield
Houston, Tx. 77073
Phone : (281) 443-9065
Fax : (281) 443-9064

DESCRIPTION	LEGENDS & ABBREVIATIONS		
CUSTOMER	Tekton Custom Homes, LLC		
END USER	Bruce Peck		
END USE	Shop	BUILDING	A
STREET	201 2nd Ave.		
CITY ST ZIP	Severance, CO 80546		
SALES NO: 71792	JOB NO: 157132	SCALE: N.T.S.	DWG. NO.: C2 of 2

DRAWING INDEX

DWG.NO.	ISSUE	DRAWING TITLE	DWG.NO.	ISSUE	DRAWING TITLE	DWG.NO.	ISSUE	DRAWING TITLE
C1	A	COVER SHEET						
C2	A	LEGENDS AND ABBREVIATIONS						
C3	A	DRAWING INDEX						
C4	A	UNLOADING, HANDLING, & STORING OF MATERIALS						
F1	0	COLUMN LAYOUT PLAN						
F2	0	ANCHOR BOLT DETAILS						
F3	0	REACTIONS						
F4	0	DESIGN CALCULATE WIND REPORT						
E1	A	ROOF FRAMING PLAN						
E2	A	ROOF SHEETING PLAN						
E3	A	SIDEWALL FRAMING & SHEETING ELEVATION						
E4	A	SIDEWALL FRAMING & SHEETING ELEVATION						
E5	A	ENDWALL FRAMING & SHEETING ELEVATION						
E6	A	ENDWALL FRAMING & SHEETING ELEVATION						
E7	A	RIGID FRAME ELEVATION						
E8	A	STANDARD CONNECTION DETAILS						
E9	A	STANDARD CONNECTION DETAILS						
E10	A	STANDARD SHEETING DETAILS						
E11	A	STANDARD SHEETING DETAILS						

FOR PERMIT

12/6/21

COLORADO LICENSED
CARLITO M. DAYAG
46701
PROFESSIONAL ENGINEER

SEALING OF THIS DRAWING DOES NOT IMPLY OR CONSTITUTE THAT RIGID GLOBAL ENGINEER IS THE ENGINEER OF RECORD OR THE DESIGN PROFESSIONAL FOR THIS PROJECT. ONLY THE DESIGN OF THE METAL BUILDING SYSTEM AS FURNISHED BY RIGID IS INCLUDED. FOUNDATION ANALYSIS, ELECTRICAL, AND MECHANICAL SYSTEMS, AND/OR OTHER PARTS SUPPLIED BY ANYONE OTHER THAN RIGID ARE SPECIFICALLY EXCLUDED. NO INSPECTION OR SUPERVISION IS IMPLIED.

ISSUE	DESCRIPTION	DATE	DRN.	CHK.	DES.
A	PERMIT	12/02/21	MRR	RCR	MRR

RIGID GLOBAL BUILDINGS
18933 Aldine Westfield
Houston, TX 77073
Phone : (281) 443-9065
Fax: (281) 443-9064

DESCRIPTION	DRAWING INDEX		
CUSTOMER	Tekton Custom Homes, LLC		
END USER	Bruce Peck		
END USE	SHOP	BUILDING	A
STREET	201 2nd Ave.		
CITY ST ZIP	Severance, CO 80546		

SALES NO.:	JOB NO.:	SCALE:	DWG. NO.:	ISSUE:
71792	157132	N.T.S.	C3 of 42	A

UNLOADING, HANDLING AND STORING OF MATERIALS

STRUCTURAL

A great amount of time and trouble can be saved if the building site is according to a pre-arranged plan. Proper location and handling of components will eliminate unnecessary handling.

Inspect all shipments prior to releasing the tie-downs for loads that may have shifted during transit, REMEMBER, SAFETY FIRST!

Blocking under the columns and rafters protects the splice plates and the slab from damage during the unloading process. It also facilitates the placing of slings or cables around the members for later lifting and allows members to be bolted together into sub-assemblies while on the ground. Extra care should always be exercised in the unloading operations to prevent injuries from handling the steel and to prevent damage to materials and the concrete slabs.

If water is allowed to remain for extended periods in bundles of primed parts such as girts, purlins etc., the pigment will fade and the paint will gradually soften, reducing the bond to the steel. Therefore, upon receipt of a job, all bundles of primed parts should be stored at an angle to allow any trapped water to drain away and permit air circulation for drying. Puddles of water should not be allowed to collect and remain on columns, rafters or beams for the same reason.

All Primer should be touched up as required before erection!

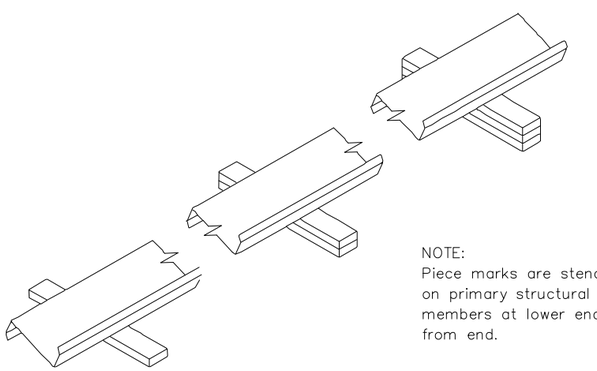

NOTE:
Piece marks are stenciled on primary structural members at lower end, 1'-0" from end.

WALLS AND ROOF PANELS

RIGID's wall and roof panels including color coated, galvalume and galvanized, provide excellent service under widely varied conditions. All unloading and erection personnel should fully understand that these panels are quality merchandise which merit cautious care in handling.

Under no circumstances should panels be handled roughly. Packages of sheets should be lifted off the truck with extreme care taken to insure that no damage occurs to ends of the sheets or to side ribs. The packages should be stored off the ground sufficiently high to allow air circulation underneath the packages. This avoids ground moisture and deters people from walking on the packages. One end of the package should always be elevated to encourage drainage in case of rain.

All stacked metal panels are subject, to some degree, to localized discoloration or stain when water is trapped between their closely nested surfaces. RIGID exercises extreme caution during fabricating and shipping operations to insure that all panel stock is kept dry. However, due to climatic conditions, water formed by condensation of humid air can be trapped between stacked sheets. Water can also be trapped between stacked sheets when exposed to rain. This discoloration caused by trapped moisture is often called wet storage stain.

The stain is usually superficial and has little effect on the appearance or service life of the panels as long as it is not permitted to remain on the panels. However, moisture in contact with the surface of the panels over an extended period can severely attack the finish and reduce the effective service life. Therefore, it is imperative that all panels be inspected for moisture upon receipt of the order. If moisture is present, dry the panels at once and store in a dry, warm place.

CAUTION: Care should always be taken when walking on panels. Use saftey lines and nets when necessary! Panels are slippery. Oil or wax applied to the roof and wall panels for protection against weather damage will make them a very slippery surface. Wipe dry any oil that has puddled from bundles stored on a slope. Dew, frost, or other forms of moisture greatly increase the slipperiness of the panels. Always assume panel surface is slippery and act accordingly. Think safety!!

Use wood blocking to elevate and slope the panels in a manner that will allow moisture to drain. Wood blocking placed between bundles will provide additional air circulation. Cover the stacked bundles with a tarp or plastic cover leaving enough opening at the bottom for air to circulate.

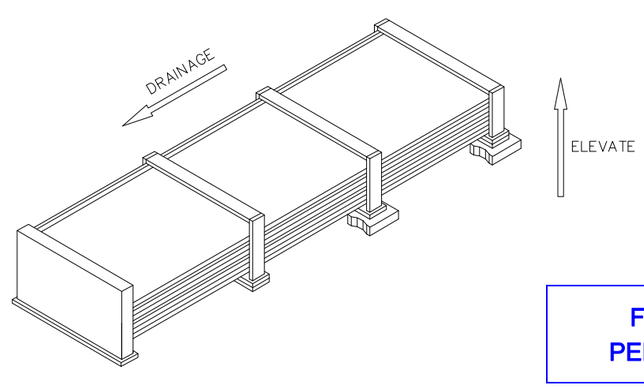

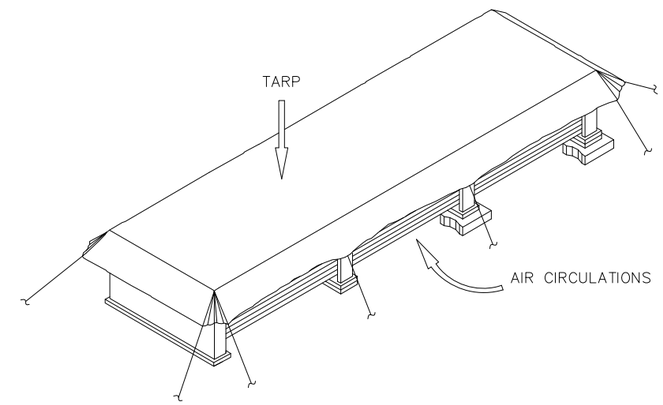

When handling or uncrating the panels, lift, rather than slide, them apart. Burred edges may scratch the coated surfaces when sheets are slid over one another. Never allow panels to be walked on while on the ground.

Rough and improper handling of a panel is inexcusable and a prime example of poor job supervision.

NOTE:
Use gloves when handling metal panels to prevent hand injuries. Be aware, of the dangers of handling panels on a windy day. A large panel can catch enough wind to knock a worker off his feet, even at ground level!! Safety first!

GENERAL NOTE:
1. OIL CANNING OF PANELS IS NOT A CAUSE OF REJECTION.
2. EXTREME CARE MUST BE EXERCISED DURING THE ERECTION OF ROOF PANELS AND TRIMS. FOOT TRAFFIC MAY RESULT IN PERMANENT PANEL DISTORTION OR ABRASION.

12/6/21

COLORADO LICENSED
CARLITO M. DAYAG
46701
PROFESSIONAL ENGINEER

FOR PERMIT

SEALING OF THIS DRAWING DOES NOT IMPLY OR CONSTITUTE THAT RIGID GLOBAL ENGINEER IS THE ENGINEER OF RECORD OR THE DESIGN PROFESSIONAL FOR THIS PROJECT. ONLY THE DESIGN OF THE METAL BUILDING SYSTEM AS FURNISHED BY RIGID IS INCLUDED. FOUNDATION ANALYSIS, ELECTRICAL, AND MECHANICAL SYSTEMS, AND/OR OTHER PARTS SUPPLIED BY ANYONE OTHER THAN RIGID ARE SPECIFICALLY EXCLUDED. NO INSPECTION OR SUPERVISION IS IMPLIED.

CUSTOMER:			
Tekton Custom Homes, LLC			
SALES NO.: 71792	JOB NO.: 157132	BUILDING: A	DATE: 12/6/21

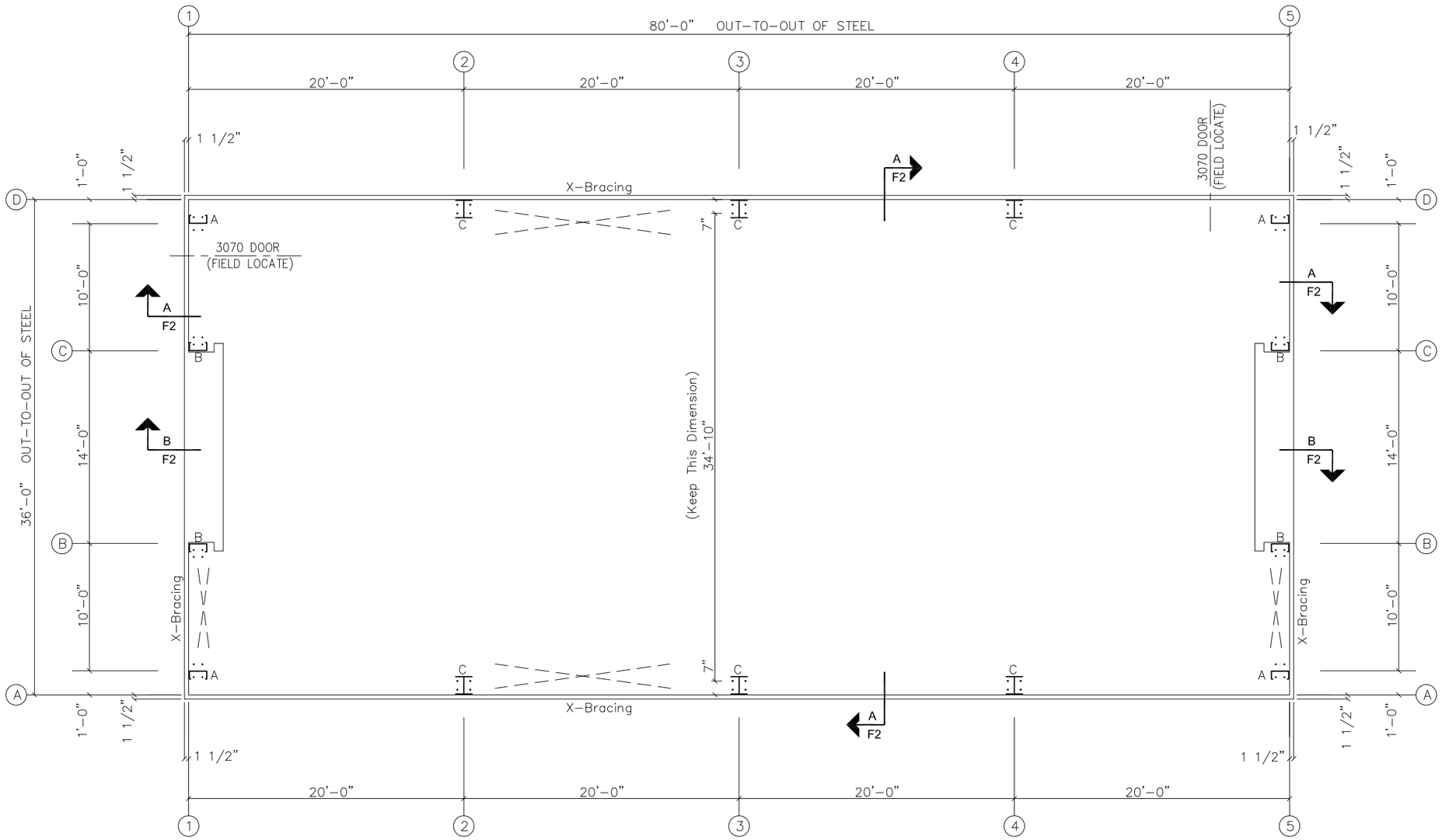

COLUMN LAYOUT PLAN

NOTE: All Base Plates @ 100'-0" (U.N.)

TWO 3070 WALK DOORS TO BE FIELD LOCATED.

FOR PERMIT

12/6/21

COLORADO LICENSED
CARLITO M. DAYAG
46701
PROFESSIONAL ENGINEER

SEALING OF THIS DRAWING DOES NOT IMPLY OR CONSTITUTE THAT RIGID GLOBAL ENGINEER IS THE ENGINEER OF RECORD OR THE DESIGN PROFESSIONAL FOR THIS PROJECT. ONLY THE DESIGN OF THE METAL BUILDING SYSTEM AS FURNISHED BY RIGID IS INCLUDED. FOUNDATION ANALYSIS, ELECTRICAL, AND MECHANICAL SYSTEMS, AND/OR OTHER PARTS SUPPLIED BY ANYONE OTHER THAN RIGID ARE SPECIFICALLY EXCLUDED. NO INSPECTION OR SUPERVISION IS IMPLIED.

ISSUE	DESCRIPTION	DATE	DRN.	CHK.	DES.
0	CONSTRUCTION/PERMIT	12/02/21	MRR	RCR	MRR

RIGID GLOBAL BUILDINGS
18933 Aldine Westfield
Houston, Tx. 77073
Phone : (281) 443-9065
Fax : (281) 443-9064

DESCRIPTION	COLUMN LAYOUT PLAN		
CUSTOMER	Tekton Custom Homes, LLC		
END USER	Bruce Peck		
END USE	Shop	BUILDING	A
STREET	201 2nd Ave.		
CITY ST ZIP	Severance, CO 80546		

SALES NO.	JOB NO.	SCALE	DWG. NO.	REV.
71792	157132	N.T.S.	R1-C1	0

Dia= 5/8"
Thk= 1/4"

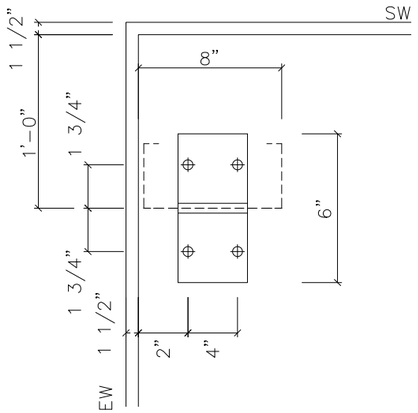

DETAIL A

Dia= 5/8"
Thk= 1/4"

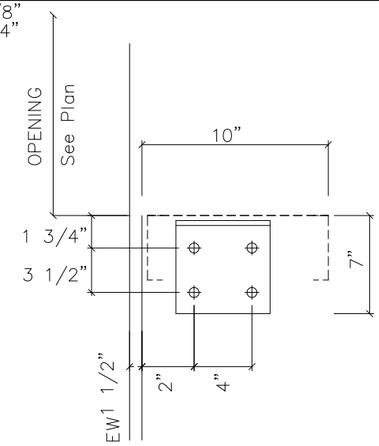

DETAIL B

Dia= 3/4"
Thk= 1/2"

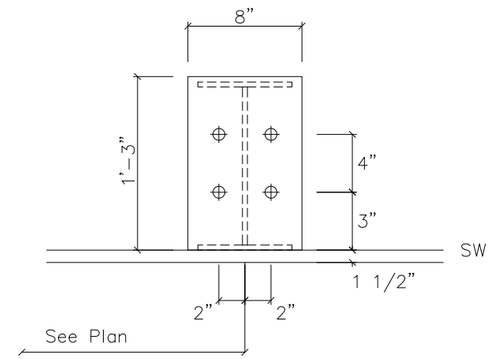

DETAIL C

Dia= 1/2" Expansion Bolts – For Field Located

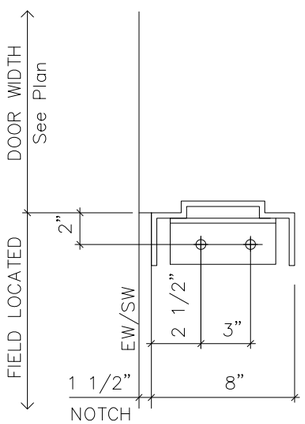

DETAIL-WD (FOR WALK DOOR)

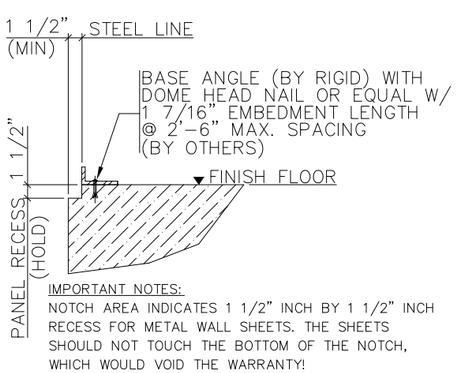

IMPORTANT NOTES:
NOTCH AREA INDICATES 1 1/2" INCH BY 1 1/2" INCH RECESS FOR METAL WALL SHEETS. THE SHEETS SHOULD NOT TOUCH THE BOTTOM OF THE NOTCH, WHICH WOULD VOID THE WARRANTY!

A TYP. SECTION THRU PANEL RECESS

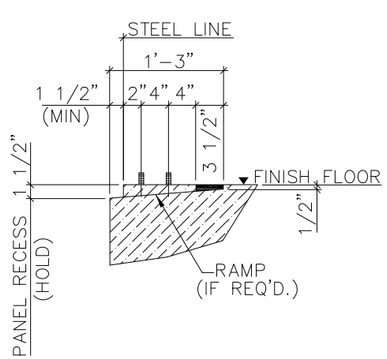

B TYP. SECTION THRU FRAMED OPENING

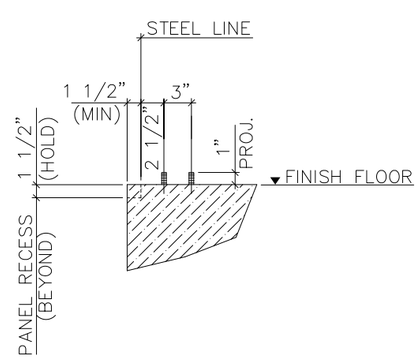

C TYP. SECTION THRU WALK DOOR OPNG.

FOR PERMIT

12/6/21

COLORADO LICENSED
CARLITO M. DAYAG
46701
PROFESSIONAL ENGINEER

SEALING OF THIS DRAWING DOES NOT IMPLY OR CONSTITUTE THAT RIGID GLOBAL ENGINEER IS THE ENGINEER OF RECORD OR THE DESIGN PROFESSIONAL FOR THIS PROJECT. ONLY THE DESIGN OF THE METAL BUILDING SYSTEM AS FURNISHED BY RIGID IS INCLUDED. FOUNDATION ANALYSIS, ELECTRICAL, AND MECHANICAL SYSTEMS, AND/OR OTHER PARTS SUPPLIED BY ANYONE OTHER THAN RIGID ARE SPECIFICALLY EXCLUDED. NO INSPECTION OR SUPERVISION IS IMPLIED.

GENERAL NOTES:
① THE ANCHOR BOLT DETAILS SHOWN ON THIS DRAWING LOCATE THE ANCHOR BOLTS IN REFERENCE TO BOTH THE BUILDING STEEL LINE AND THE OUTSIDE OF RIGID'S SUGGESTED PANEL RECESS OF 1-1/2".
② THE ANCHOR BOLT SETTING PLAN LOCATES ANCHOR BOLTS IN REFERENCE TO THE OUTSIDE OF THE PANEL RECESS SHOWN. IF THE ACTUAL PANEL RECESS IS DIFFERENT FROM WHAT IS SHOWN ON THE ANCHOR BOLT SETTING PLAN, THEN ALL REFERENCE DIMENSIONS FROM THE OUTSIDE OF THE PANEL RECESS MUST BE DETERMINED BY THE CUSTOMER.
③ BOTTOM OF ALL BASE PLATES ARE AT THE SAME ELEVATION. (UNLESS NOTED)

NOTE:
ONLY ANCHOR BOLTS SETTING PLAN ISSUED & STAMPED "FOR CONSTRUCTION" SHALL BE USED IN SETTING ANCHOR BOLTS. 'RIGID GLOBAL BUILDINGS' SHALL NOT BE RESPONSIBLE FOR ERROR OR DISCREPANCY IF THE DRAWING USED IS NOT VALID FOR CONSTRUCTION.

QTY.	SYMBOL	DIA.	PROJ.
–		1/2"	1"
32		5/8"	2"
24		3/4"	2 1/2"
–		7/8"	2 3/4"
–		1"	3"
–		1 1/8"	3 1/2"
–		1 1/2"	3 1/2"

ANCHOR BOLT DETAIL

ANCHOR BOLT PROJECTION "PROJ." IS MEASURED FROM BOTTOM OF BASE PLATE

LENGHT OF "PROJ." SHOWN IS FOR ONE NUT + ONE WASHER

DETAIL OF ANCHOR BOLT AS PER THE SUPPLIER

NUTS & WASHERS BY SUPPLIER

ANCHOR BOLTS NOT BY RIGID GLOBAL BUILDINGS

ISSUE	DESCRIPTION	DATE	DRN.	CHK.	DES.
0	CONSTRUCTION/PERMIT	12/02/21	MRR	RCR	MRR

RIGID GLOBAL BUILDINGS
18933 Aldine Westfield
Houston, Tx. 77073
Phone : (281) 443-9065
Fax : (281) 443-9064

DESCRIPTION	ANCHOR BOLT DETAILS		
CUSTOMER	Tekton Custom Homes, LLC		
END USER	Bruce Peck		
END USE	Shop	BUILDING	A
STREET	201 2nd Ave.		
CITY ST ZIP	Severance, CO 80546		
SALES NO.: 71792	JOB NO.: 157132	SCALE: N.T.S.	DWG. NO.: R02

FRAME LINES: 2 3 4

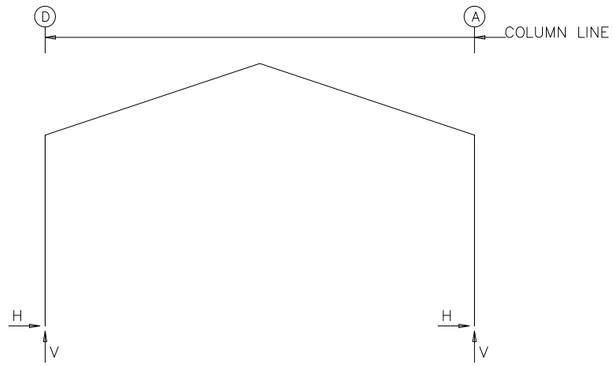

RIGID FRAME: MAXIMUM REACTIONS, ANCHOR BOLTS, & BASE PLATES

Frm Line	Col Line	Column_Reactions(k) Load Id	Hmax H	V Vmax	Load Id	Hmin H	V Vmin	Bolt(in) Qty	Dia	Base_Plate(in) Width	Length	Thick	Grout (in)
2*	D	1	3.9	13.4	4	−2.7	−2.4	4	0.750	8.000	15.00	0.500	0.0
					2	−2.4	−4.1						
2*	A	5	2.7	−2.4	1	−3.9	13.4	4	0.750	8.000	15.00	0.500	0.0
		1	−3.9	13.4	3	2.4	−4.1						

2* Frame lines: 2 3 4

NOTES FOR REACTIONS

1. All loading conditions are examined and only maximum/minimum H or V and the corresponding H or V are reported.
2. Positive reactions are as shown in the sketch. Foundation loads are in opposite directions.
3. Bracing reactions are in the plane of the brace with the H pointing away from the braced bay. The vertical reaction is downward.
4. Building reactions are based on the following building data.

Width (ft)	: 36	
Length (ft)	: 80	
Eave Height (ft)	: 16 / 16	
Roof Slope (rise/12)	: 4.0:12 / 4.0:12	
Design Code	: IBC 18	
Enclosure	: Closed	
Dead Load (psf)	: 2.000	
Collateral Load (psf)	: 0	
Wind Speed (mph)	: 115 mph	
Wind Importance Factor	: 1.00	
Wind Exposure	: C	
Live Load (psf)	: 20.00	
Frame Live Load (psf)	: 12	
Ground Snow Load (psf)	: 43.000	
Roof Snow Load (psf)	: 30.1	
Snow Exposure	: 1.000	
Snow Importance Factor	: 1.000	
Thermal Factor	: 1.000	
Seismic Importance Factor	: 1.00	
Spectral Response Accel.	: Ss=0.166	: S1=0.052
Spectral Response Coeff.	: Sds=0.176	: Sd1=0.083
Seismic Coeff. (Fa*Ss)	: 0.264	: Fa=1.600
Seismic Design Category	: B	

5. Loading conditions are:
   1 Dead+Collateral+Snow+Slide_Snow
   2 0.6Dead+0.6Wind_Left1
   3 0.6Dead+0.6Wind_Right1
   4 0.6Dead+0.6Wind_Left2
   5 0.6Dead+0.6Wind_Right2
   6 0.6Dead+0.6Wind_Right1+0.6Wind_Suction
   7 0.6Dead+0.6Wind_Pressure+0.6Wind_Long1L
   8 0.6Dead+0.6Wind_Left1+0.6Wind_Suction
   9 Dead+Collateral+E1UNB_SL_L
   10 0.6Dead+0.6Wind_Pressure+0.6Wind_Long2L
   11 Dead+Collateral+E1UNB_SL_R
   12 Dead+Collateral+0.75Snow+0.45Wind_Left2+0.45Wind_Suction+0.75Slide_Snow
   13 Dead+Collateral+0.75Snow+0.45Wind_Right2+0.45Wind_Suction+0.75Slide_Snow
   14 Dead+Collateral+E2UNB_SL_L
   15 Dead+Collateral+E2UNB_SL_R

RIGID FRAME: BASIC COLUMN REACTIONS (k)

Frame Line	Column Line	Dead Horiz	Dead Vert	Live Horiz	Live Vert	Snow Horiz	Snow Vert	Wind_Left1 Horiz	Wind_Left1 Vert	Wind_Right1 Horiz	Wind_Right1 Vert	Wind_Left2 Horiz	Wind_Left2 Vert
2*	D	0.3	1.3	1.5	4.6	3.6	12.1	−4.3	−8.1	1.7	−4.4	−4.8	−5.3
2*	A	−0.3	1.3	−1.5	4.6	−3.6	12.1	−1.7	−4.4	4.3	−8.1	−1.1	−1.6

Frame Line	Column Line	Wind_Right2 Horiz	Wind_Right2 Vert	Wind_Long1 Horiz	Wind_Long1 Vert	Wind_Long2 Horiz	Wind_Long2 Vert	Seismic_Left Horiz	Seismic_Left Vert	Seismic_Right Horiz	Seismic_Right Vert	Seismic_Long Horiz	Seismic_Long Vert
2*	D	1.1	−1.6	1.0	−7.7	0.2	−7.3	−0.3	−0.2	0.3	0.2	0.0	−0.8
2*	A	4.8	−5.3	−0.2	−7.3	−1.0	−7.7	−0.3	0.2	0.3	−0.2	0.0	−0.8

Frame Line	Column Line	F1UNB_SL_L Horiz	F1UNB_SL_L Vert	F1UNB_SL_R Horiz	F1UNB_SL_R Vert
2*	D	3.0	10.5	3.1	6.3
2*	A	−3.1	6.3	−3.0	10.5

2* Frame lines: 2 3 4

ENDWALL COLUMN: BASIC COLUMN REACTIONS (k)

Frm Line	Col Line	Dead Vert	Live Vert	Snow Vert	Wind_Left1 Horz	Wind_Left1 Vert	Wind_Right1 Horz	Wind_Right1 Vert	Wind_Left2 Horz	Wind_Left2 Vert	Wind_Right2 Horz	Wind_Right2 Vert	Wind Press Horz	Wind Suct Horz
1	D	0.3	1.2	2.1	0.0	−1.7	0.0	−2.2	0.0	−1.0	0.0	−1.5	−0.9	1.0
1	C	0.5	3.1	4.6	0.0	−3.5	0.0	−1.8	0.0	−2.7	0.0	−1.0	−2.3	2.5
1	B	0.5	3.1	4.6	1.8	−5.7	0.0	−0.3	1.8	−4.8	0.0	0.6	−2.3	2.5
1	A	0.3	1.2	2.1	0.0	1.6	1.8	−5.0	0.0	2.3	1.8	−4.3	−0.9	1.0

Frm Line	Col Line	Wind_Long1 Horz	Wind_Long1 Vert	Wind_Long2 Horz	Wind_Long2 Vert	Seis_Left Horz	Seis_Left Vert	Seis_Right Horz	Seis_Right Vert	E1UNB_SL_L Horz	E1UNB_SL_L Vert	E1UNB_SL_R Horz	E1UNB_SL_R Vert
1	D	0.0	−1.4	0.0	−0.7	0.0	0.0	0.0	0.0	0.0	1.3	0.0	0.3
1	C	0.0	−3.3	0.0	−2.2	0.0	0.0	0.0	0.0	0.0	5.7	0.0	2.2
1	B	0.0	−1.0	0.7	−4.8	0.3	−0.7	0.0	0.6	0.0	2.2	0.0	5.7
1	A	0.7	−2.0	0.0	0.1	0.0	0.7	0.3	−0.6	0.0	0.3	0.0	1.3

Frm Line	Col Line	Dead Vert	Live Vert	Snow Vert	Wind_Left1 Horz	Wind_Left1 Vert	Wind_Right1 Horz	Wind_Right1 Vert	Wind_Left2 Horz	Wind_Left2 Vert	Wind_Right2 Horz	Wind_Right2 Vert	Wind Press Horz	Wind Suct Horz
5	A	0.3	1.2	2.1	1.8	−5.0	0.0	1.6	1.8	−4.3	0.0	2.3	−0.9	1.0
5	B	0.5	3.1	4.6	0.0	−0.3	1.8	−5.7	0.0	0.6	1.8	−4.8	−2.3	2.5
5	C	0.5	3.1	4.6	0.0	−1.8	0.0	−3.5	0.0	−1.0	0.0	−2.7	−2.3	2.5
5	D	0.3	1.2	2.1	0.0	−2.2	0.0	−1.7	0.0	−1.5	0.0	−1.0	−0.9	1.0

Frm Line	Col Line	Wind_Long1 Horz	Wind_Long1 Vert	Wind_Long2 Horz	Wind_Long2 Vert	Seis_Left Horz	Seis_Left Vert	Seis_Right Horz	Seis_Right Vert	E2UNB_SL_L Horz	E2UNB_SL_L Vert	E2UNB_SL_R Horz	E2UNB_SL_R Vert
5	A	0.0	0.1	0.7	−2.0	0.3	−0.6	0.0	0.7	0.0	1.3	0.0	0.3
5	B	0.7	−4.8	0.0	−1.0	0.0	0.6	0.3	−0.7	0.0	5.7	0.0	2.2
5	C	0.0	−2.2	0.0	−3.3	0.0	0.0	0.0	0.0	0.0	2.2	0.0	5.7
5	D	0.0	−0.7	0.0	−1.4	0.0	0.0	0.0	0.0	0.0	0.3	0.0	1.3

ENDWALL COLUMN: MAXIMUM REACTIONS, ANCHOR BOLTS, & BASE PLATES

Frm Line	Col Line	Column_Reactions(k) Load Id	Hmax H	V Vmax	Load Id	Hmin H	V Vmin	Bolt(in) Qty	Dia	Base_Plate(in) Width	Length	Thick	Grout (in)
1	D	6	0.6	−1.2	7	−0.5	−0.7	4	0.625	6.000	6.000	0.250	0.0
		1	0.0	2.4	6	0.6	−1.2						
1	C	8	1.5	−1.8	7	−1.4	−1.7	4	0.625	7.000	6.000	0.250	0.0
		9	0.0	6.2	8	1.5	−1.8						
1	B	8	1.5	−3.1	10	−1.4	−2.5	4	0.625	7.000	6.000	0.250	0.0
		11	0.0	6.2	8	1.5	−3.1						
1	A	6	0.6	−2.8	7	−0.5	−1.0	4	0.625	6.000	6.000	0.250	0.0
		12	0.5	2.9	6	0.6	−2.8						
5	A	8	0.6	−2.8	10	−0.5	−1.0	4	0.625	6.000	6.000	0.250	0.0
		13	0.5	2.9	8	0.6	−2.8						
5	B	6	1.5	−3.1	7	−1.4	−2.5	4	0.625	7.000	6.000	0.250	0.0
		14	0.0	6.2	6	1.5	−3.1						
5	C	6	1.5	−1.8	10	−1.4	−1.7	4	0.625	7.000	6.000	0.250	0.0
		15	0.0	6.2	6	1.5	−1.8						
5	D	8	0.6	−1.2	10	−0.5	−0.7	4	0.625	6.000	6.000	0.250	0.0
		1	0.0	2.4	8	0.6	−1.2						

BUILDING BRACING REACTIONS

Wall Loc	Wall Line	Col Line	± Reactions(k) Wind Horz	Wind Vert	Seismic Horz	Seismic Vert	Panel_Shear (lb/ft) Wind	Seis
L_EW	1	B,A	1.8	3.1	0.3	0.6		
F_SW	A	2,3	2.8	2.0	1.1	0.8		
R_EW	5	A,B	1.8	3.1	0.3	0.6		
B_SW	D	3,2	2.8	2.0	1.1	0.8		

FOR PERMIT

12/6/21

COLORADO LICENSED
CARLITO M. DAYAG
46701
PROFESSIONAL ENGINEER

SEALING OF THIS DRAWING DOES NOT IMPLY OR CONSTITUTE THAT RIGID GLOBAL ENGINEER IS THE ENGINEER OF RECORD OR THE DESIGN PROFESSIONAL FOR THIS PROJECT. ONLY THE DESIGN OF THE METAL BUILDING SYSTEM AS FURNISHED BY RIGID IS INCLUDED. FOUNDATION ANALYSIS, ELECTRICAL, AND MECHANICAL SYSTEMS, AND/OR OTHER PARTS SUPPLIED BY ANYONE OTHER THAN RIGID ARE SPECIFICALLY EXCLUDED. NO INSPECTION OR SUPERVISION IS IMPLIED.

ISSUE	DESCRIPTION	DATE	DRN.	CHK.	DES.
0	CONSTRUCTION/PERMIT	12/02/21	MRR	RCR	MRR

RIGID GLOBAL BUILDINGS
18933 Aldine Westfield
Houston, Tx. 77073
Phone : (281) 443-9065
Fax : (281) 443-9064

DESCRIPTION	REACTIONS
CUSTOMER	Tekton Custom Homes, LLC
END USER	Bruce Peck
END USE	Shop — BUILDING A
STREET	201 2nd Ave.
CITY ST ZIP	Severance, CO 80546

SALES NO.: 71792 | JOB NO.: 157132 | SCALE: N.T.S. | DWG. NO.: R03-0001 | REV.: 0

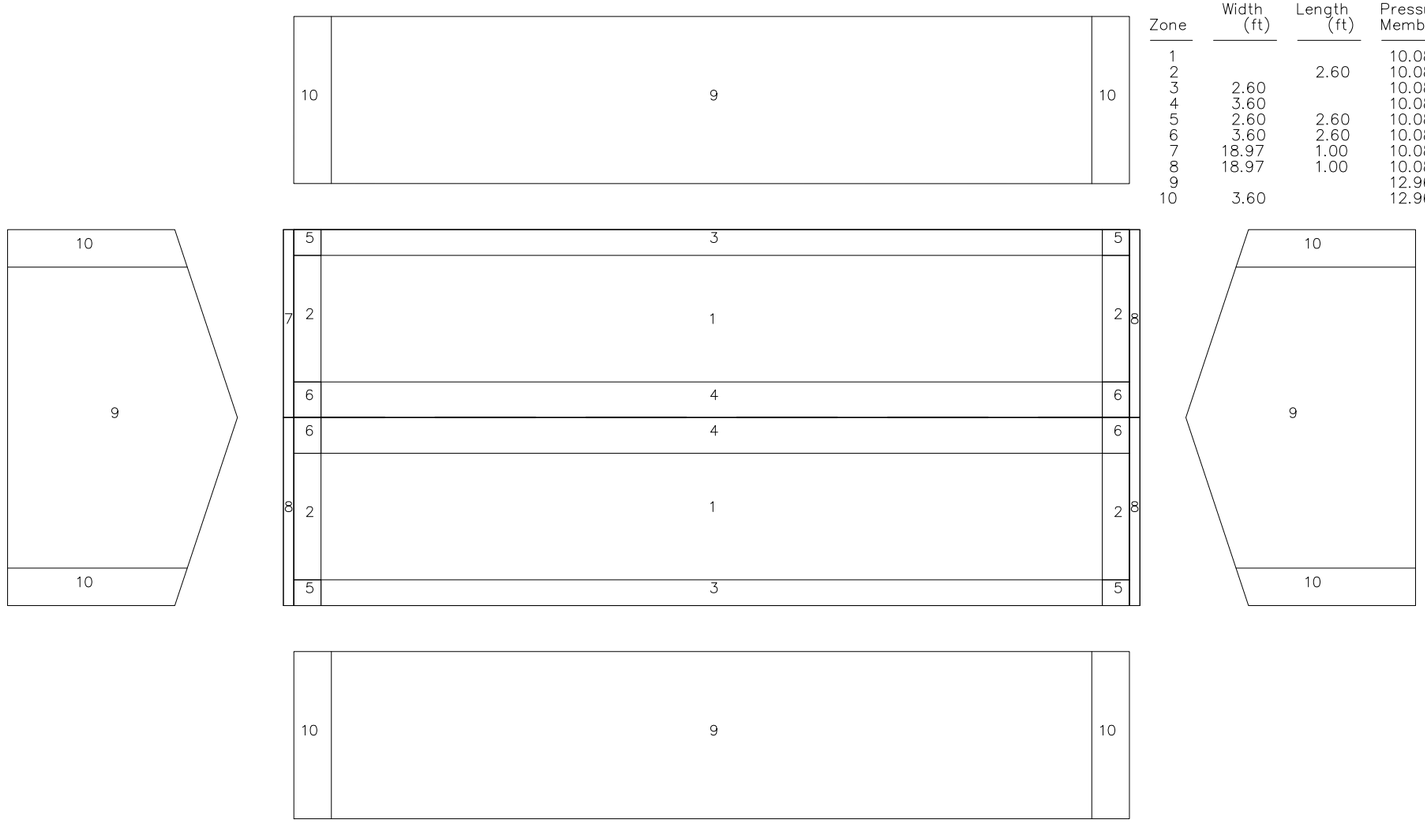

Components & Cladding (Factored)

Zone	Width (ft)	Length (ft)	Pressure(psf) Member	Pressure(psf) Panel	Suction(psf) Member	Suction(psf) Panel
1			10.08	10.08	−9.60	−28.16
2		2.60	10.08	10.08	−24.67	−41.11
3	2.60		10.08	10.08	−9.60	−28.16
4	3.60		10.08	10.08	−24.67	−41.11
5	2.60	2.60	10.08	10.08	−24.67	−41.11
6	3.60	2.60	10.08	10.08	−27.94	−48.71
7	18.97	1.00	10.08	10.08	−40.99	−45.33
8	18.97	1.00	10.08	10.08	−45.22	−45.33
9			12.96	15.24	−14.28	−16.56
10	3.60		12.96	15.24	−15.85	−20.37

Design Calculation Wind

FOR PERMIT

12/6/21

COLORADO LICENSED
CARLITO M. DAYAG
46701
PROFESSIONAL ENGINEER

SEALING OF THIS DRAWING DOES NOT IMPLY OR CONSTITUTE THAT RIGID GLOBAL ENGINEER IS THE ENGINEER OF RECORD OR THE DESIGN PROFESSIONAL FOR THIS PROJECT. ONLY THE DESIGN OF THE METAL BUILDING SYSTEM AS FURNISHED BY RIGID IS INCLUDED. FOUNDATION ANALYSIS, ELECTRICAL, AND MECHANICAL SYSTEMS, AND/OR OTHER PARTS SUPPLIED BY ANYONE OTHER THAN RIGID ARE SPECIFICALLY EXCLUDED. NO INSPECTION OR SUPERVISION IS IMPLIED.

ISSUE	DESCRIPTION	DATE	DRN.	CHK.	DES.
0	CONSTRUCTION/PERMIT	12/02/21	MRR	RCR	MRR

RIGID GLOBAL BUILDINGS
18933 Aldine Westfield
Houston, Tx. 77073
Phone : (281) 443-9065
Fax : (281) 443-9064

DESCRIPTION	REACTIONS
CUSTOMER	Tekton Custom Homes, LLC
END USER	Bruce Peck
END USE	Shop — BUILDING: A
STREET	201 2nd Ave.
CITY ST ZIP	Severance, CO 80546

SALES NO.	JOB NO.	SCALE	DWG. NO.	REV.
71792	157132	N.T.S.	R04-0001	0

EXTENSION/CANOPY BOLTS ROOF PLAN				
MARK	QUAN	TYPE	DIA	LENGTH
EB-2	4	A325	5/8"	1 1/2"
EB-3	4	A325	5/8"	1 1/2"

MEMBER TABLE ROOF PLAN	
MARK	PART
EB-1	10x35C14
EB-2	W10x12
EB-3	W10x12
EB-4	10x35C14
P-1	10x25Z14
P-2	10x25Z14
P-3	10x25Z14
E-1	L10ES14
E-2	L10ES14
E-3	10x25C16
E-4	10x25C16
E-5	L10ES14
CB-5	CB0250

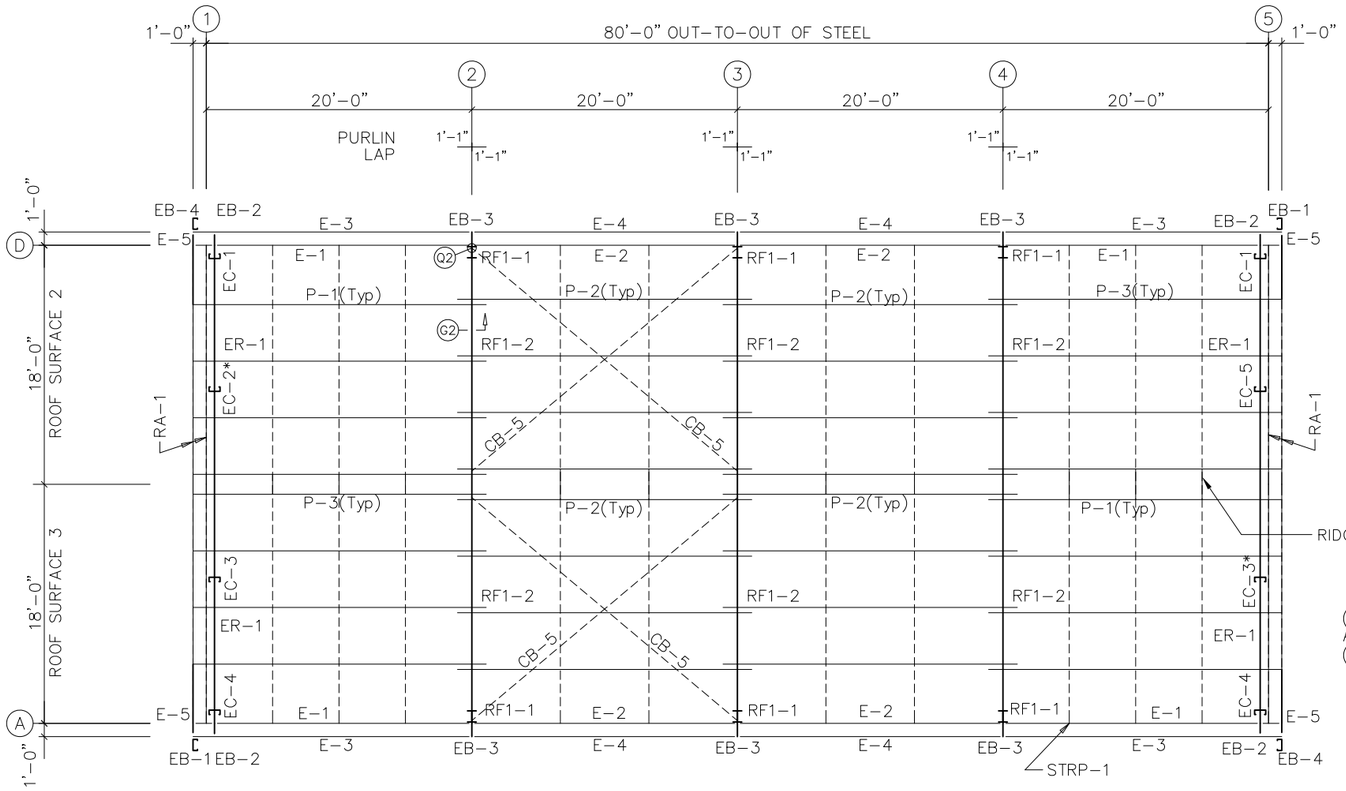

ROOF FRAMING PLAN

NOTE: ROOF AND WALL INSULATION BY OTHERS.

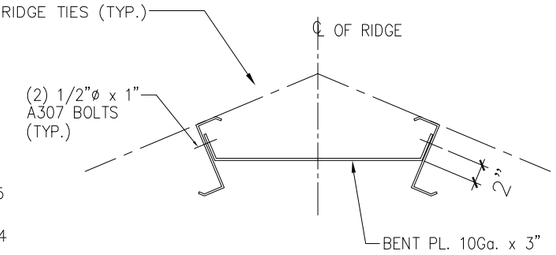

TYPICAL RIDGE TIE DETAIL

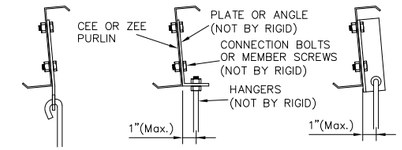

HANGERS ON CEE OR ZEE PURLINS MUST ATTACH TO THE WEB ONLY. HANGERS MUST BE LOCATED SO THAT THE SUPPORTED LOAD DOES NOT EXCEED THAT SPECIFIED IN THE CONTRACT DOCUMENTS. SUGGESTED DETAILS ARE AS SHOWN ABOVE.

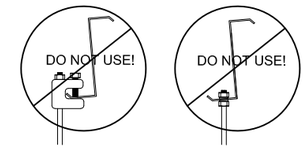

DO NOT USE C-CLAMPS OR ANY OTHER HANGER ATTACHED TO THE FLANGE OF THE PURLIN. IT REDUCES THE CAPACITY OF THE PURLIN AND PRODUCE SECONDARY STRESSES.

1 SF38 TYP. COLLATERAL LOAD CONNECTION DETAIL

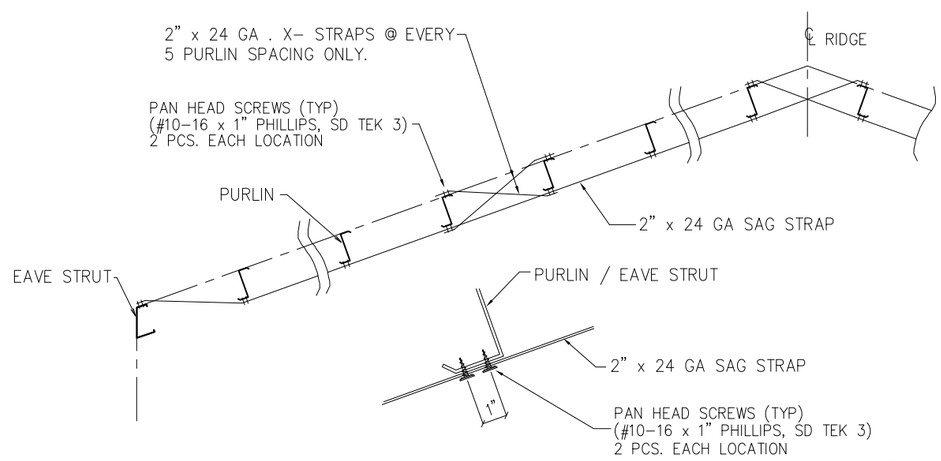

TYPICAL SAG STRAP CONNECTION DETAIL

FOR PERMIT

12/6/21

COLORADO LICENSED CARLITO M. DAYAG 46701 PROFESSIONAL ENGINEER

SEALING OF THIS DRAWING DOES NOT IMPLY OR CONSTITUTE THAT RIGID GLOBAL ENGINEER IS THE ENGINEER OF RECORD OR THE DESIGN PROFESSIONAL FOR THIS PROJECT. ONLY THE DESIGN OF THE METAL BUILDING SYSTEM AS FURNISHED BY RIGID IS INCLUDED. FOUNDATION ANALYSIS, ELECTRICAL, AND MECHANICAL SYSTEMS, AND/OR OTHER PARTS SUPPLIED BY ANYONE OTHER THAN RIGID ARE SPECIFICALLY EXCLUDED. NO INSPECTION OR SUPERVISION IS IMPLIED.

IMPORTANT NOTES:

High R-value roof insulation systems require two layers of insulation. The sag straps that prevent purlin roll may conflict with faced roof insulation between purlins. Rigid Global Buildings recommends an unfaced layer between the purlins that can be cut around the required framing.

ISSUE	DESCRIPTION	DATE	DRN.	CHK.	DES.
A	PERMIT	12/02/21	MRR	RCR	MRR

RIGID GLOBAL BUILDINGS
18933 Aldine Westfield
Houston, Tx. 77073
Phone : (281) 443-9065
Fax : (281) 443-9064

DESCRIPTION	ROOF FRAMING		
CUSTOMER	Tekton Custom Homes, LLC		
END USER	Bruce Peck		
END USE	Shop	BUILDING	A
STREET	201 2nd Ave.		
CITY ST ZIP	Severance, CO 80546		

SALES NO:	JOB NO:	SCALE:	DWG. NO:	REVISION
71792	157132	N.T.S.	E1 of 1	01

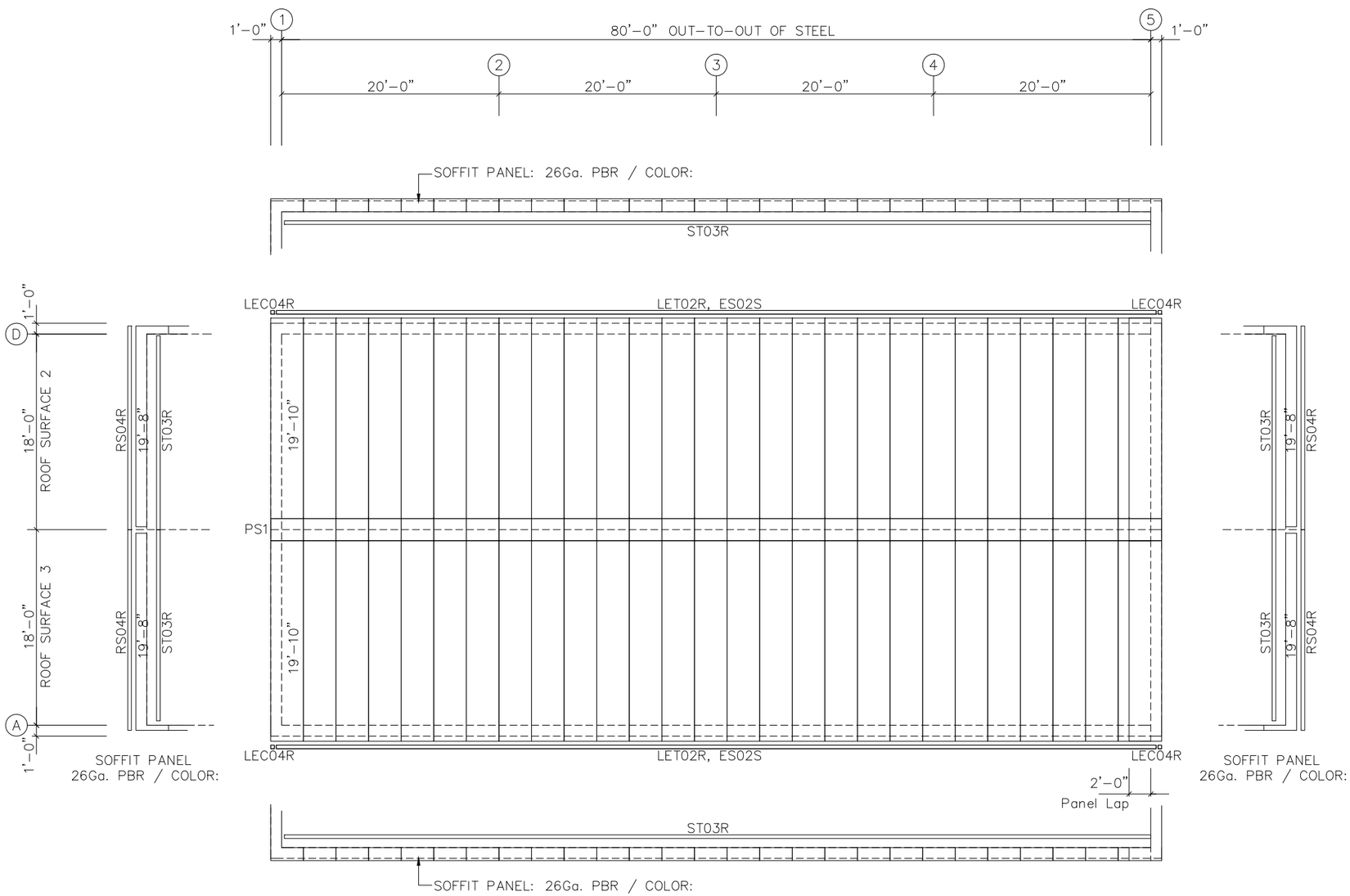

ROOF SHEETING PLAN

PANELS: 26 Ga. PBR – S2000 Standard

NOTE:
ROOF AND WALL INSULATION ARE 'BY OTHERS'.

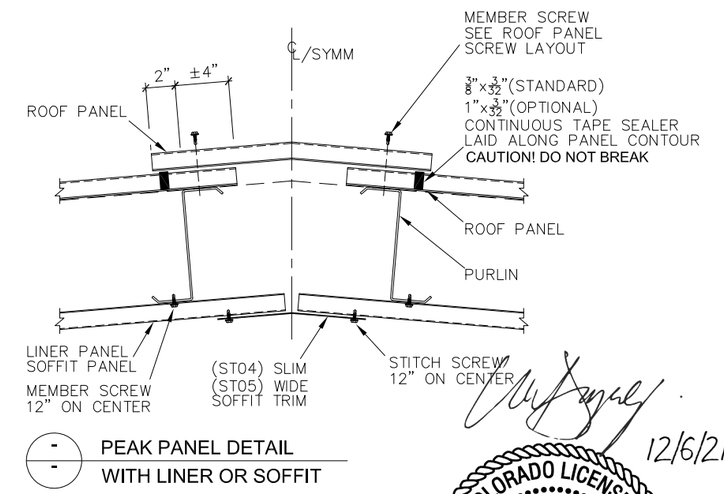

PEAK PANEL DETAIL
WITH LINER OR SOFFIT

12/6/21

COLORADO LICENSED
CARLITO M. DAYAG
46701
PROFESSIONAL ENGINEER

IMPORTANT NOTES:

1. OIL CANNING OF PANELS IS NOT A CAUSE OF REJECTION.
2. EXTREME CARE MUST BE EXERCISED DURING ERECTION OF ROOF PANELS AND TRIMS. FOOT TRAFFIC MAY RESULT IN PERMANENT PANEL DISTORTION AND FINISH ABRASION.

ERECTOR'S NOTE

1. INSTALLER OF STANDING SEAM ROOF PANEL MUST STUDY THE INSTALLATION MANUALS PRIOR TO INSTALLATION. MANUALS ARE PROVIDED WITH THE MATERIALS SHIPMENT BUT CAN BE REQUESTED OR DOWNLOADED FROM THE RIGID GLOBAL BUILDINGS WEBSITE AT www.rigidbuilding.com
2. FAILURE TO INSTALL THE ROOF SHEETS IN ACCORDANCE WITH THE SHEETING DIRECTIONAL ARROWS SHOWN ON THESE PLANS MAY RESULT IN IMPROPER FIT–UP OF THE OUTSIDE CLOSURES (END DAMS) AND POSSIBLY OTHER TRIM COMPONENTS WHICH COULD AFFECT THE OVERALL APPEARANCE AND WEATHER TIGHTNESS OF THE BUILDING. RIGID WILL NOT BE HELD REPONSIBLE FOR THE CHARGES OR ADDITIONAL FIELD WORK DUE TO NOT FOLLOWING SHEETING DIRECTIONAL ARROWS AND OTHER PROCEDURES OUTLINED IN THE ERECTION MANUAL.
3. IN THE EVENT THAT A DISCREPANCY OR ERROR ARISES WITH MATERIALS SHIPPED FOR THIS PROJECT OR ON THESE ERECTION DRAWINGS, THE ERECTOR/INSTALLER MUST NOTIFY RGB PRIOR TO CORRECTING. IF RGB IS NOT NOTIFIED, RGB WILL NOT HONOR BACKCHARGES BY ANY PARTY INVOLVED.
4. MEMBER SCREW AND STITCH SCREW PATTERNS AND LOCATIONS SHALL BE IN ACCORDANCE WITH ROOF AND WALL DETAILS SHOWN ON DWG. # E10 & –E11.
5. RGB SUPPLIES 5% OVERAGE FOR SCREWS AND ANY CLAIM ON SHORTAGE BECAUSE OF NON–COMPLIANCE WITH THE DRAWINGS SHALL NOT BE RGB'S RESPONSIBLITY.

FOR PERMIT

SEALING OF THIS DRAWING DOES NOT IMPLY OR CONSTITUTE THAT RIGID GLOBAL ENGINEER IS THE ENGINEER OF RECORD OR THE DESIGN PROFESSIONAL FOR THIS PROJECT. ONLY THE DESIGN OF THE METAL BUILDING SYSTEM AS FURNISHED BY RIGID IS INCLUDED. FOUNDATION ANALYSIS, ELECTRICAL, AND MECHANICAL SYSTEMS, AND/OR OTHER PARTS SUPPLIED BY ANYONE OTHER THAN RIGID ARE SPECIFICALLY EXCLUDED. NO INSPECTION OR SUPERVISION IS IMPLIED.

ISSUE	DESCRIPTION	DATE	DRN.	CHK.	DES.
A	PERMIT	12/02/21	MRR	RCR	MRR

RIGID GLOBAL BUILDINGS
18933 Aldine Westfield
Houston, Tx. 77073
Phone : (281) 443-9065
Fax : (281) 443-9064

DESCRIPTION	ROOF SHEETING		
CUSTOMER	Tekton Custom Homes, LLC		
END USER	Bruce Peck		
END USE	Shop	BUILDING	A
STREET	201 2nd Ave.		
CITY ST ZIP	Severance, CO 80546		

SALES NO.	JOB NO.	SCALE	DWG. NO.	SHEET
71792	157132	N.T.S.	E02	1 OF 1

MEMBER TABLE FRAME LINE A	
MARK	PART
E-1	L10ES14
E-2	L10ES14
E-5	L10ES14
G-6	8x25Z16
G-7	8x25Z16
G-8	8x25Z16
CB-4	CB0250

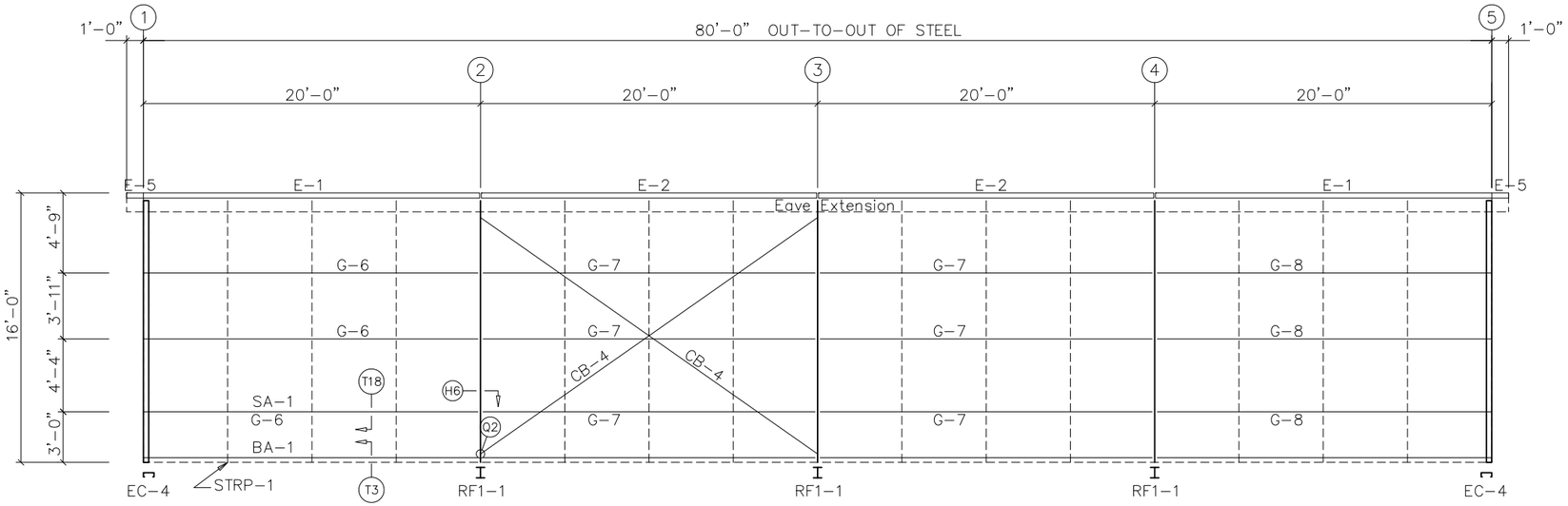

SIDEWALL FRAMING: FRAME LINE A

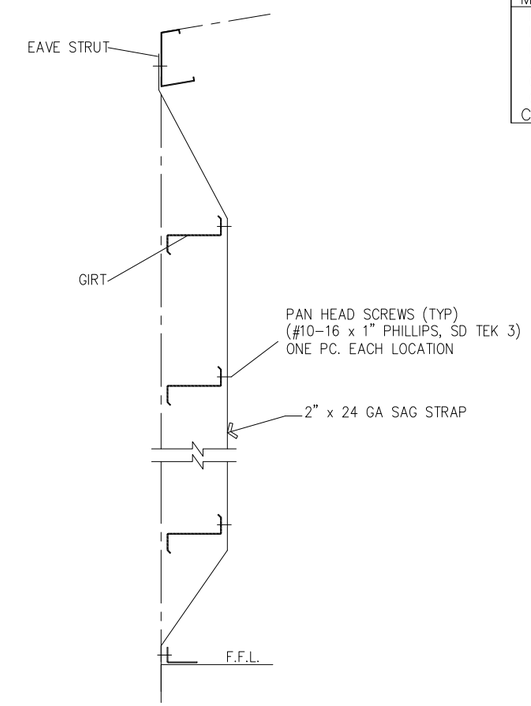

TYP. SAG STRAP DETAIL
AT SIDEWALL

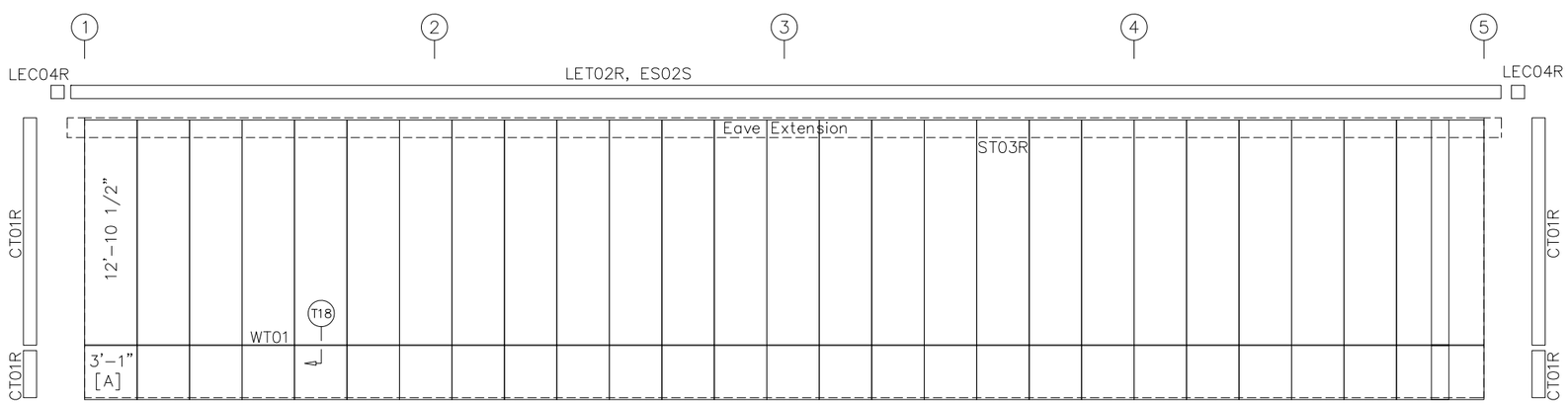

SIDEWALL SHEETING & TRIM: FRAME LINE A

26 Ga. PBR – S2000 Standard
[A] 26 Ga. PBR – S2000 Standard

COLORADO LICENSED
CARLITO M. DAYAG
46701
PROFESSIONAL ENGINEER
12/6/21

FOR PERMIT

SEALING OF THIS DRAWING DOES NOT IMPLY OR CONSTITUTE THAT RIGID GLOBAL ENGINEER IS THE ENGINEER OF RECORD OR THE DESIGN PROFESSIONAL FOR THIS PROJECT. ONLY THE DESIGN OF THE METAL BUILDING SYSTEM AS FURNISHED BY RIGID IS INCLUDED. FOUNDATION ANALYSIS, ELECTRICAL, AND MECHANICAL SYSTEMS, AND/OR OTHER PARTS SUPPLIED BY ANYONE OTHER THAN RIGID ARE SPECIFICALLY EXCLUDED. NO INSPECTION OR SUPERVISION IS IMPLIED.

ISSUE	DESCRIPTION	DATE	DRN.	CHK.	DES.
A	PERMIT	12/02/21	MRR	RCR	MRR

RIGID GLOBAL BUILDINGS
18933 Aldine Westfield
Houston, Tx. 77073
Phone : (281) 443-3065
Fax : (281) 443-3064

DESCRIPTION	SIDEWALL FRAMING		
CUSTOMER	Tekton Custom Homes, LLC		
END USER	Bruce Peck		
END USE	Shop	BUILDING	A
STREET	201 2nd Ave.		
CITY ST ZIP	Severance, CO 80546		

SALES NO.: 71792 | JOB NO.: 157132 | SCALE: N.T.S. | DWG. NO.: E0340-1 | REV.: 1

MEMBER TABLE FRAME LINE D	
MARK	PART
E-1	L10ES14
E-2	L10ES14
E-5	L10ES14
G-6	8x25Z16
G-7	8x25Z16
G-8	8x25Z16
CB-4	CB0250

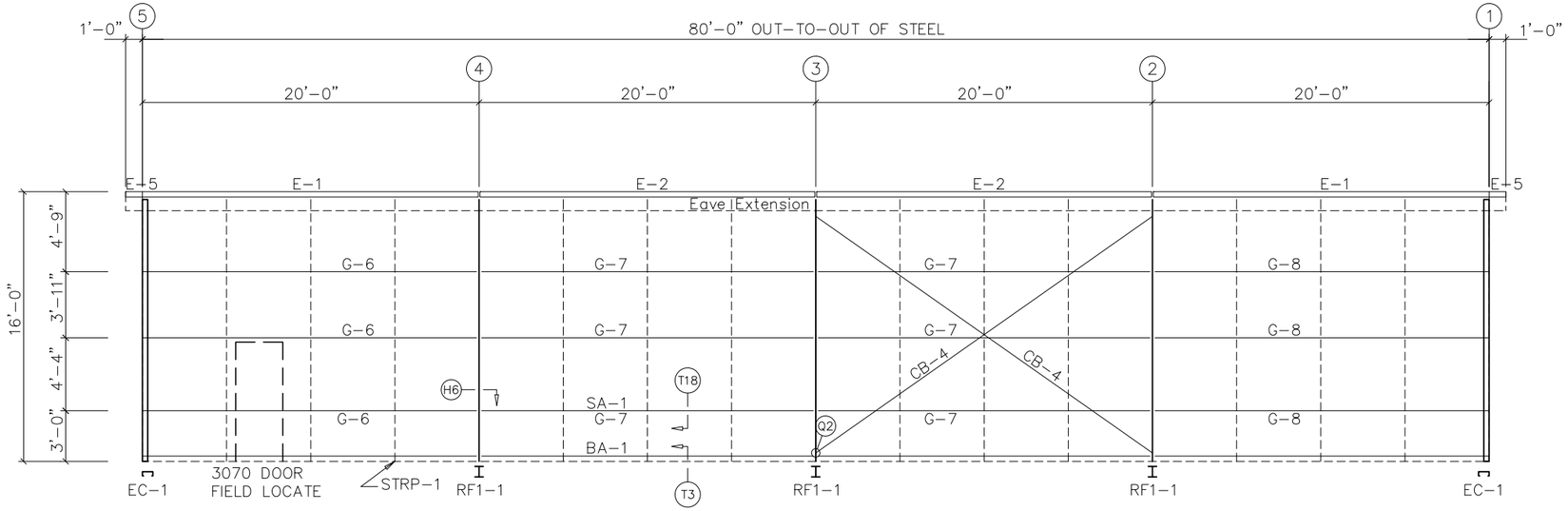

SIDEWALL FRAMING: FRAME LINE D

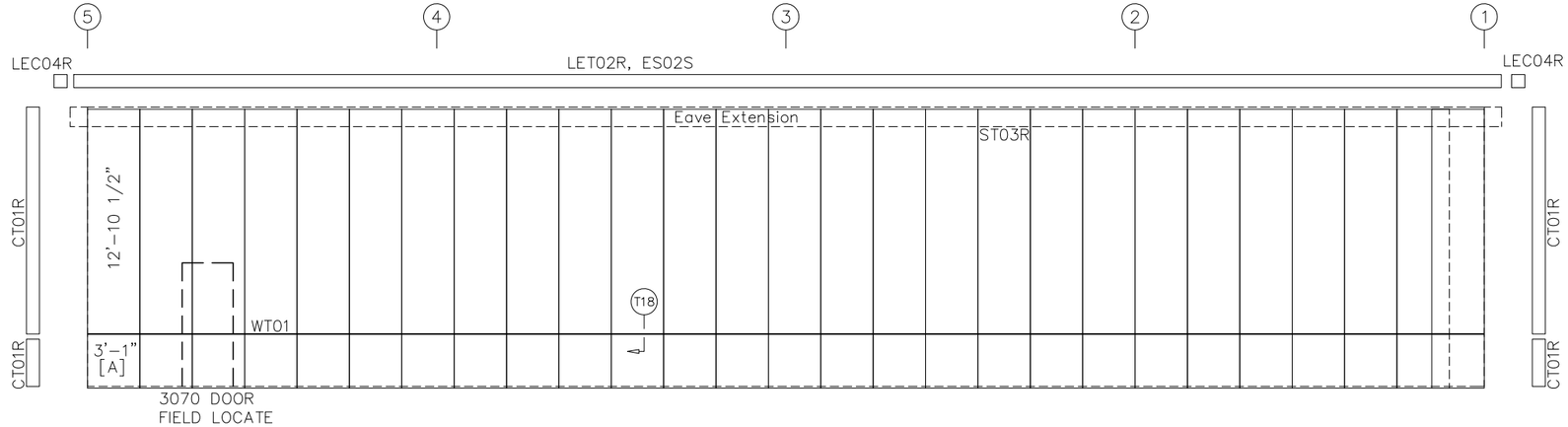

SIDEWALL SHEETING & TRIM: FRAME LINE D

26 Ga. PBR – S2000 Standard

[A] 26 Ga. PBR – S2000 Standard

12/6/21

COLORADO LICENSED
CARLITO M. DAYAG
46701
PROFESSIONAL ENGINEER

FOR PERMIT

SEALING OF THIS DRAWING DOES NOT IMPLY OR CONSTITUTE THAT RIGID GLOBAL ENGINEER IS THE ENGINEER OF RECORD OR THE DESIGN PROFESSIONAL FOR THIS PROJECT. ONLY THE DESIGN OF THE METAL BUILDING SYSTEM AS FURNISHED BY RIGID IS INCLUDED. FOUNDATION ANALYSIS, ELECTRICAL, AND MECHANICAL SYSTEMS, AND/OR OTHER PARTS SUPPLIED BY ANYONE OTHER THAN RIGID ARE SPECIFICALLY EXCLUDED. NO INSPECTION OR SUPERVISION IS IMPLIED.

ISSUE	DESCRIPTION	DATE	DRN.	CHK.	DES.
A	PERMIT	12/02/21	MRR	RCR	MRR

RIGID GLOBAL BUILDINGS
18933 Aldine Westfield
Houston, Tx. 77073
Phone : (281) 443-9065
Fax : (281) 443-9064

DESCRIPTION	SIDEWALL FRAMING		
CUSTOMER	Tekton Custom Homes, LLC		
END USER	Bruce Peck		
END USE	Shop	BUILDING	A
STREET	201 2nd Ave.		
CITY ST ZIP	Severance, CO 80546		
SALES NO.: 71792	JOB NO.: 157132	SCALE: N.T.S.	DWG. NO.: E04 REV.: 01

BOLT TABLE FRAME LINE 1				
LOCATION	QUAN	TYPE	DIA	LENGTH
ER-1/ER-1	8	A325	5/8"	1 3/4"
Columns/Raf	4	A325	1/2"	1 1/4"

FLANGE BRACE TABLE FRAME LINE 1		
▽ID	MARK	LENGTH
1	FB1R	1'-6"

MEMBER TABLE FRAME LINE 1	
MARK	PART
EB-2	W10x12
EC-1	8x35C16
EC-2*	10x35C14
EC-3	10x35C14
EC-4	8x35C16
ER-1	W8x10
DJ-1	8x25C16
DH-1	8x25C16
DH-2	10x25C16
DS-1	8x25C16
G-1	8x25Z16
G-2	8x25Z16
G-3	8x25Z16
G-4	8x25Z16
G-5	8x25Z16
CB-1	CB0250
CB-2	CB0250
CB-3	CB0250

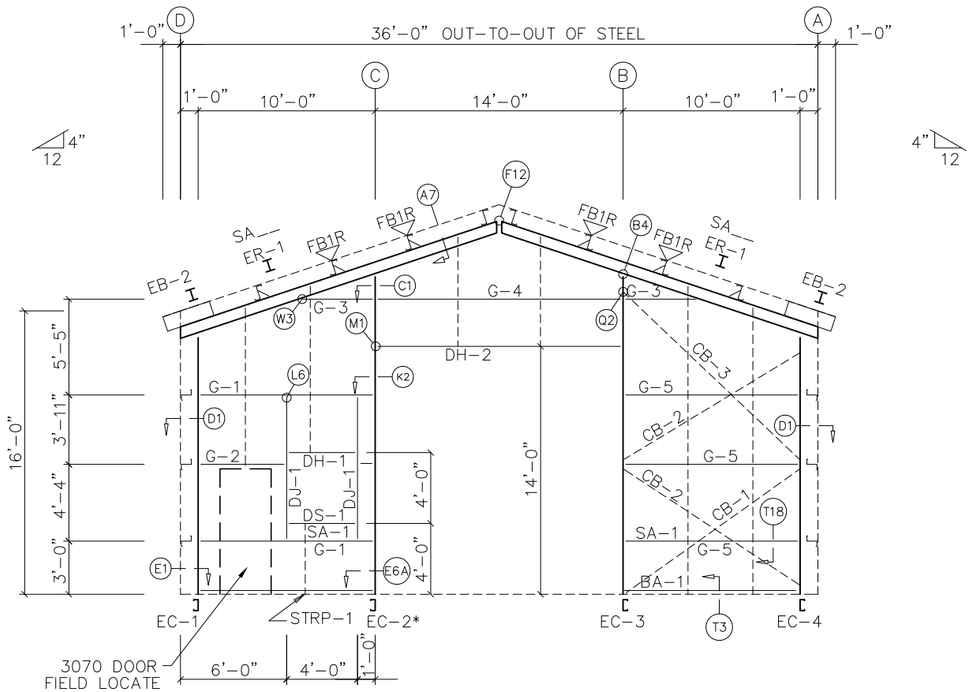

ENDWALL FRAMING: FRAME LINE 1

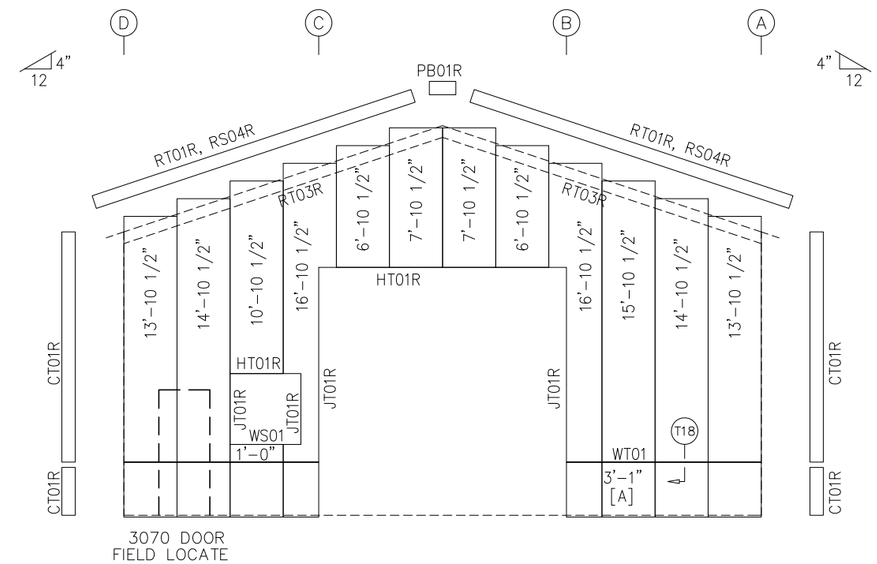

ENDWALL SHEETING & TRIM: FRAME LINE 1

PANELS: 26 Ga. PBR – S2000 Standard
[A] PANELS: 26 Ga. PBR – S2000 Standard

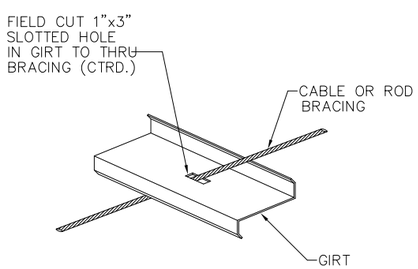

TYP. ROD/CABLE BRACING
DETAIL THRU GIRT

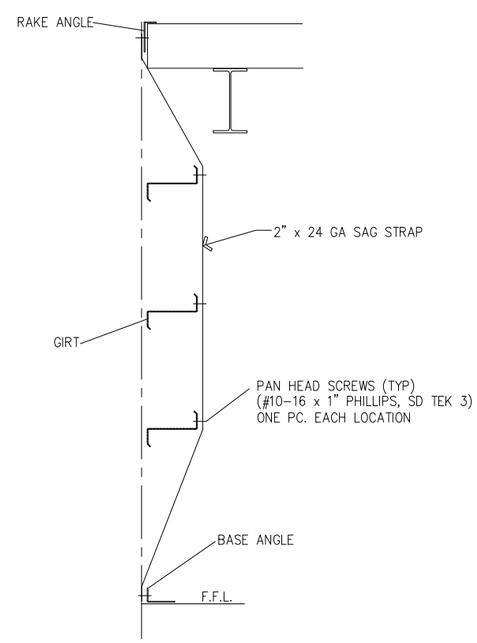

TYP. SAG STRAP DETAIL
AT ENDWALL

FOR
PERMIT

12/6/21

COLORADO LICENSED
CARLITO M. DAYAG
46701
PROFESSIONAL ENGINEER

SEALING OF THIS DRAWING DOES NOT IMPLY OR CONSTITUTE THAT RIGID GLOBAL ENGINEER IS THE ENGINEER OF RECORD OR THE DESIGN PROFESSIONAL FOR THIS PROJECT. ONLY THE DESIGN OF THE METAL BUILDING SYSTEM AS FURNISHED BY RIGID IS INCLUDED. FOUNDATION ANALYSIS, ELECTRICAL, AND MECHANICAL SYSTEMS, AND/OR OTHER PARTS SUPPLIED BY ANYONE OTHER THAN RIGID ARE SPECIFICALLY EXCLUDED. NO INSPECTION OR SUPERVISION IS IMPLIED.

NOTE:
FIELD CUT PANEL TO SUIT ROOF SLOPE:

ISSUE	DESCRIPTION	DATE	DRN.	CHK.	DES.
A	PERMIT	12/02/21	MRR	RCR	MRR

RIGID GLOBAL BUILDINGS
18933 Aldine Westfield
Houston, Tx. 77073
Phone : (281) 443-9065
Fax : (281) 443-9064

DESCRIPTION	ENDWALL FRAMING		
CUSTOMER	Tekton Custom Homes, LLC		
END USER	Bruce Peck		
END USE	Shop	BUILDING	A
STREET	201 2nd Ave.		
CITY ST ZIP	Severance, CO 80546		

SALES NO.:	JOB NO.:	SCALE:	DWG. NO.:	REVISION:
71792	157132	N.T.S.	E05	01

BOLT TABLE FRAME LINE 5				
LOCATION	QUAN	TYPE	DIA	LENGTH
ER-1/ER-1	8	A325	5/8"	1 3/4"
Columns/Raf	4	A325	1/2"	1 1/4"

FLANGE BRACE TABLE FRAME LINE 5		
▽ID	MARK	LENGTH
1	FB1R	1'-6"

MEMBER TABLE FRAME LINE 5	
MARK	PART
EB-2	W10x12
EC-1	8x35C16
EC-4	8x35C16
EC-3*	10x35C14
EC-5	10x35C14
ER-1	W8x10
DH-2	10x25C16
G-3	8x25Z16
G-4	8x25Z16
G-5	8x25Z16
CB-1	CB0250
CB-2	CB0250
CB-3	CB0250

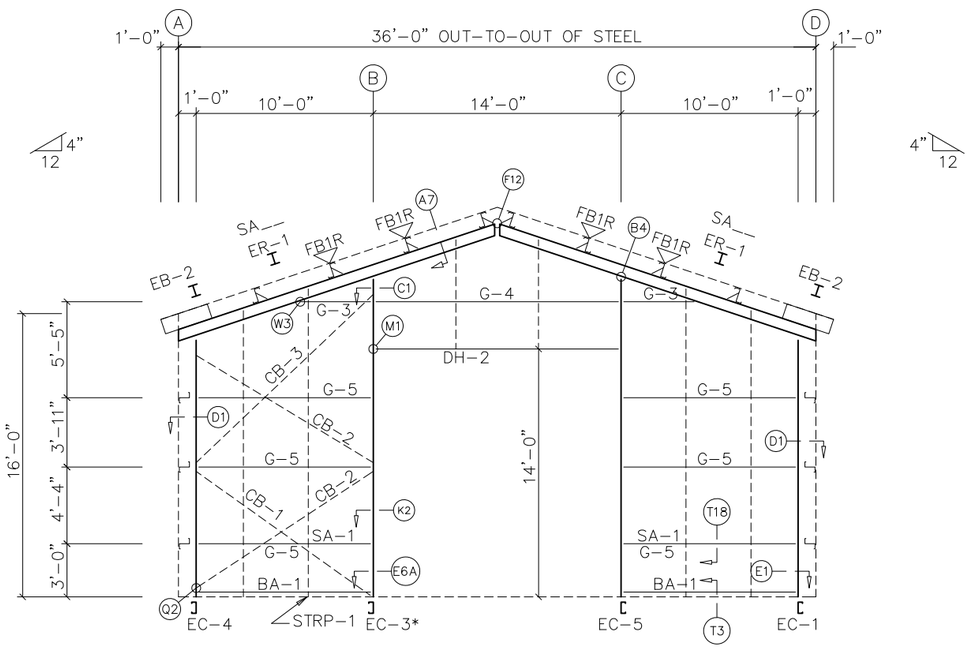

ENDWALL FRAMING: FRAME LINE 5

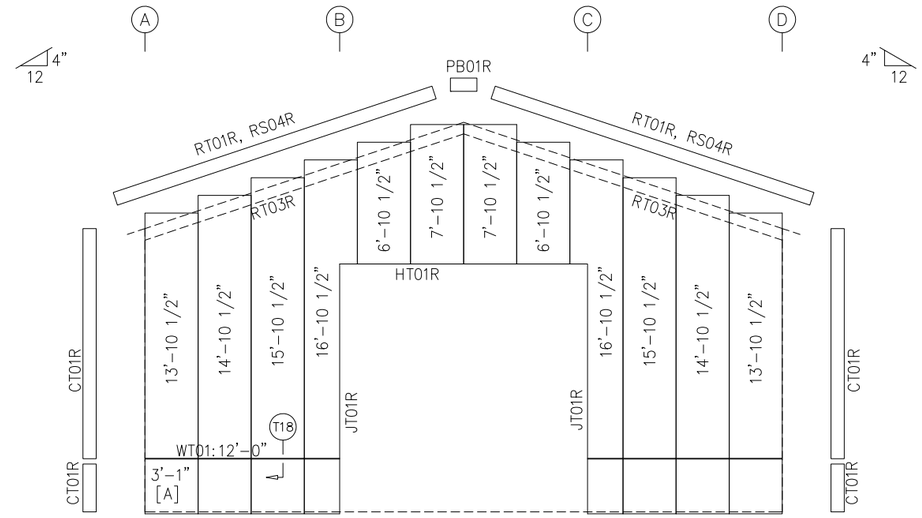

ENDWALL SHEETING & TRIM: FRAME LINE 5

PANELS: 26 Ga. PBR – S2000 Standard
[A] PANELS: 26 Ga. PBR – S2000 Standard

12/6/21

COLORADO LICENSED
CARLITO M. DAYAG
46701
PROFESSIONAL ENGINEER

FOR PERMIT

SEALING OF THIS DRAWING DOES NOT IMPLY OR CONSTITUTE THAT RIGID GLOBAL ENGINEER IS THE ENGINEER OF RECORD OR THE DESIGN PROFESSIONAL FOR THIS PROJECT. ONLY THE DESIGN OF THE METAL BUILDING SYSTEM AS FURNISHED BY RIGID IS INCLUDED. FOUNDATION ANALYSIS, ELECTRICAL, AND MECHANICAL SYSTEMS, AND/OR OTHER PARTS SUPPLIED BY ANYONE OTHER THAN RIGID ARE SPECIFICALLY EXCLUDED. NO INSPECTION OR SUPERVISION IS IMPLIED.

NOTE:
FIELD CUT PANEL TO SUIT ROOF SLOPE:

ISSUE	DESCRIPTION	DATE	DRN.	CHK.	DES.
A	PERMIT	12/02/21	MRR	RCR	MRR

RIGID GLOBAL BUILDINGS
18933 Aldine Westfield
Houston, Tx. 77073
Phone : (281) 443-9065
Fax : (281) 443-9064

DESCRIPTION	ENDWALL FRAMING		
CUSTOMER	Tekton Custom Homes, LLC		
END USER	Bruce Peck		
END USE	Shop	BUILDING	A
STREET	201 2nd Ave.		
CITY ST ZIP	Severance, CO 80546		

SALES NO.:	JOB NO.:	SCALE:	DWG. NO.:	REV.
71792	157132	N.T.S.	E06	0

SPLICE PLATE & BOLT TABLE									
Mark	Qty Top	Bot	Int	Type	Dia	Length	Width	Thick	Length
SP–1	4	4	0	A325	0.625	2.00	6”	1/2”	1’–9 1/4”
SP–2	4	4	0	A325	0.625	2.00	6”	1/2”	1’–3 11/16”

STIFFENER TABLE				
Mark	Stiff Mark	Plate Size Width	Thick	Length
RF1–1	St– 1	2.410	0.313	13.50

BASE PLATE TABLE			
Col Mark	Plate Size Width	Thick	Length
BP–1	8”	1/2”	1’–3”

FBXXA(1)=FLANGE BRACE AT ONE SIDE ONLY
FBXXA(2)=FLANGE BRACE AT BOTH SIDES
A – L2x2x14

MEMBER TABLE					
Mark	Web Depth Start/End	Web Plate Thick	Web Plate Length	Outside Flange W x Thk x Length	Inside Flange W x Thk x Length
RF1–1	14.0/14.0	0.135	167.7	5 x 1/4” x 180.4	5 x 1/4” x 167.7
	14.0/14.0	0.188	17.4	6 x 1/4” x 14.9	
RF1–2	13.3/ 8.0	0.135	215.5	5 x 1/4” x 211.0	5 x 1/4” x 212.8

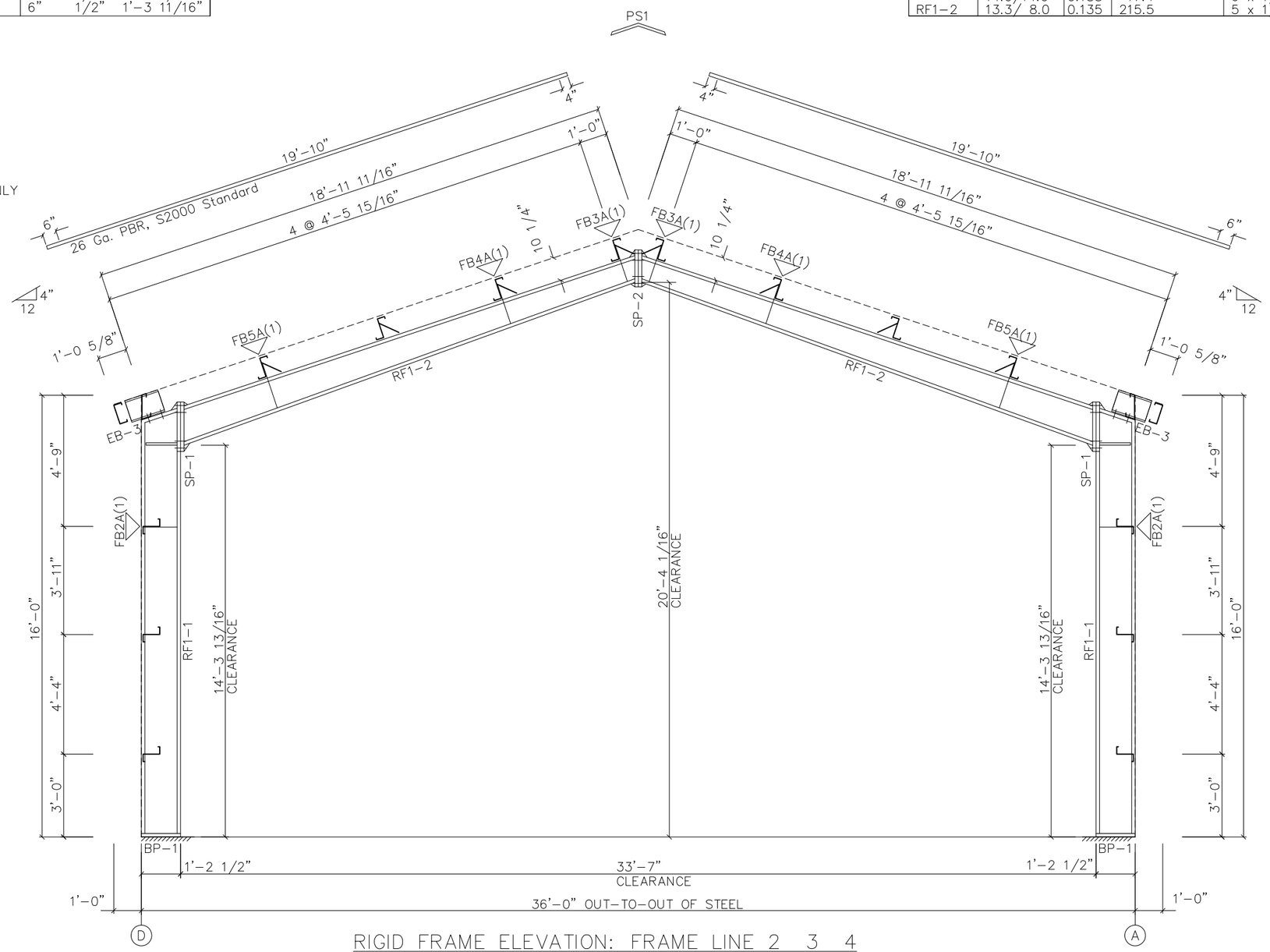

RIGID FRAME ELEVATION: FRAME LINE 2 3 4

FOR PERMIT

12/6/21

COLORADO LICENSED
CARLITO M. DAYAG
46701
PROFESSIONAL ENGINEER

SEALING OF THIS DRAWING DOES NOT IMPLY OR CONSTITUTE THAT RIGID GLOBAL ENGINEER IS THE ENGINEER OF RECORD OR THE DESIGN PROFESSIONAL FOR THIS PROJECT. ONLY THE DESIGN OF THE METAL BUILDING SYSTEM AS FURNISHED BY RIGID IS INCLUDED. FOUNDATION ANALYSIS, ELECTRICAL, AND MECHANICAL SYSTEMS, AND/OR OTHER PARTS SUPPLIED BY ANYONE OTHER THAN RIGID ARE SPECIFICALLY EXCLUDED. NO INSPECTION OR SUPERVISION IS IMPLIED.

GENERAL NOTES:

CONSTRUCTION NOTES FOR THE RIGID FRAMES.
1. ALL PRIMARY STRUCTURAL STEEL SHALL BE FABRICATED FROM 50 OR 55 KSI STEEL.
2. ALL FIELD CONNECTIONS OF PRIMARY FRAMING MEMBERS SHALL BE BOLTED. WITH A325 H. S. BOLTS AND INSTALLED BY THE 'TURN OF THE NUT' METHOD.
3. ALL FIELD CONNECTIONS OF SECONDARY FRAMING SHALL BE BOLTED WITH A307 MACHINE BOLTS.
4. WELDING PROCESSES USED BY MANUFACTURER ARE IN ACCORDANCE WITH SEC. 1.3 OF AWS D 1.1.
5. A325 High Strength bolt shall be tightened with one washer. Refer to General Notes 1.5 and 1.6 on cover sheet for tightening methods and installation inspections.

ISSUE	DESCRIPTION	DATE	DRN.	CHK.	DES.
A	PERMIT	12/02/21	MRR	RCR	MRR

RIGID GLOBAL BUILDINGS
18933 Aldine Westfield
Houston, Tx. 77073
Phone : (281) 443-9065
Fax : (281) 443-9064

DESCRIPTION	RIGID FRAME ELEVATION		
CUSTOMER	Tekton Custom Homes, LLC		
END USER	Bruce Peck		
END USE	Shop	BUILDING	A
STREET	201 2nd Ave.		
CITY ST ZIP	Severance, CO 80546		

SALES NO:	JOB NO:	SCALE:	DWG. NO:	ISSUE:
71792	157132	N.T.S.	E0 Page 1	A

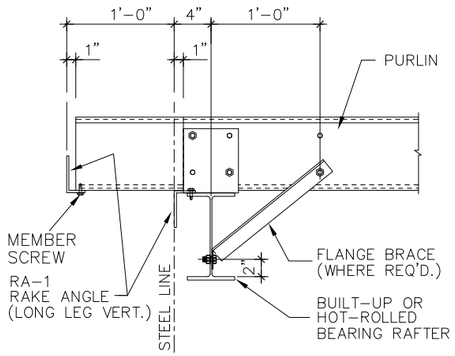

A7 **BEARING FRAME TO FLUSH ENDWALL**
ALL BOLTS ARE 1/2"ø x 1" A307 U.N.

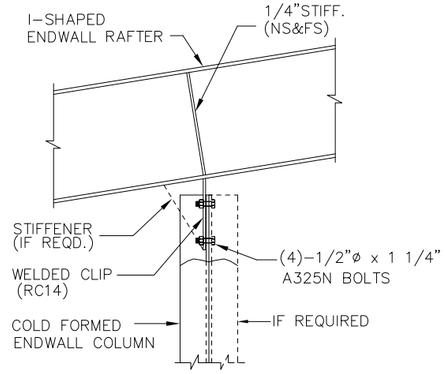

B4 **ENDWALL RAFTER TO COLUMN**
ALL BOLTS AS NOTED

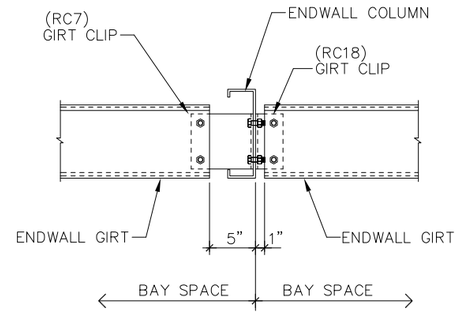

C1 **ENDWALL COLUMN TO WALL GIRT**
ALL BOLTS ARE 1/2"ø x 1" A307 U.N.

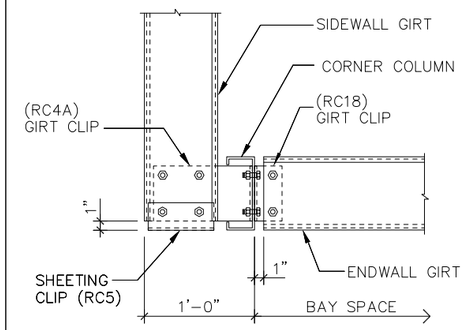

D1 **SINGLE CEE CORNER COLUMN**
ALL BOLTS ARE 1/2"ø x 1" A307 U.N.

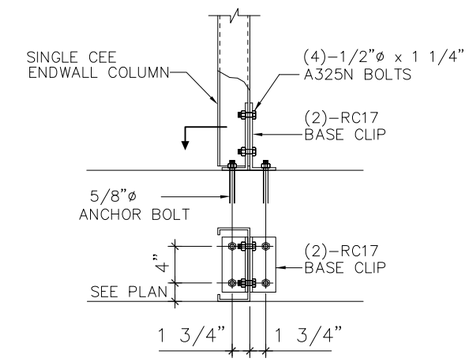

E1 **ENDWALL COLUMN BASE DETAIL**
ALL BOLTS AS NOTED

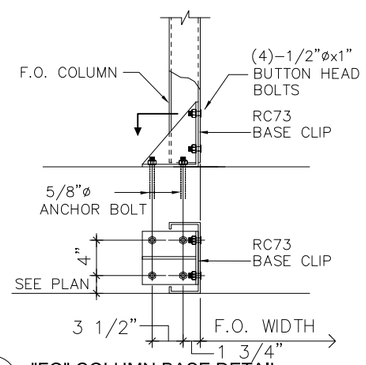

E6A **"FO" COLUMN BASE DETAIL**
WITH BOLTED BASE CLIP

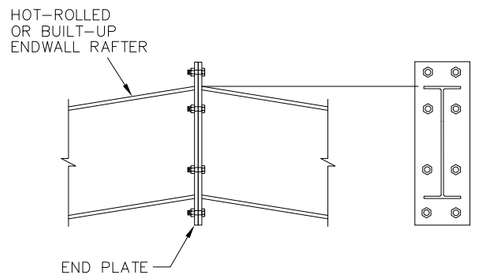

F12 **RAFTER SPLICE ALONG SURFACE HOT-ROLLED OR BUILT-UP RAFTER**
SEE ENDWALL FRAMING ELEV. FOR BOLT DIA AND TYPE.

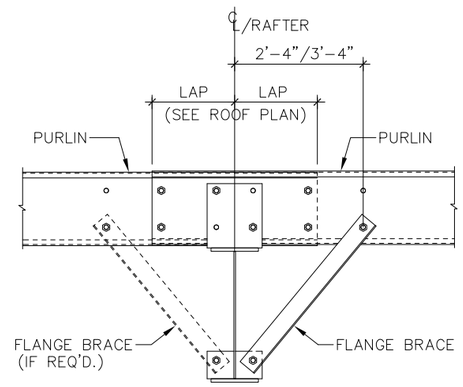

G2 **BY-PASS PURLIN TO RAFTER DETAIL**
ALL BOLTS ARE 1/2"ø x 1" A307 U.N.

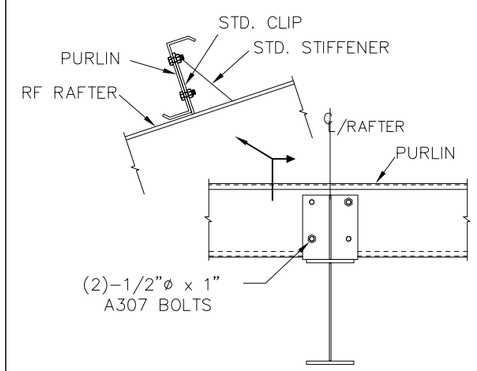

G11 **TYP. STIFFENED PURLIN CLIP DETAIL**
FOR 4:12 ROOF SLOPE OR GREATER

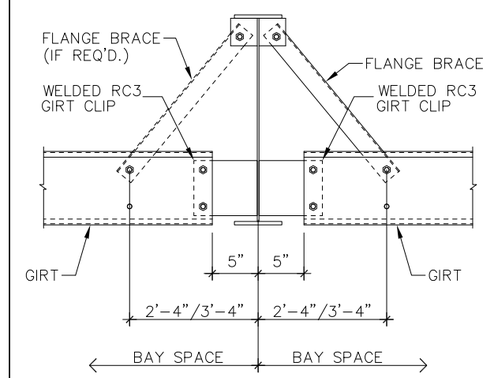

H6 **FLUSH WALL GIRT TO RF COLUMN**
ALL BOLTS ARE 1/2"ø x 1" A307 U.N.

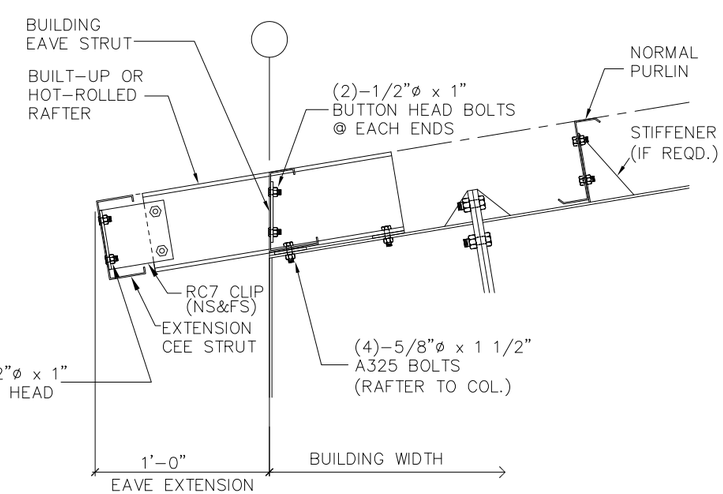

- / -- **BUILT-UP/HOT-ROLLED EAVE EXTENSION DETAIL**
ALL BOLTS ARE 1/2"ø x 1" A307 U.N.

FOR PERMIT

12/6/21

COLORADO LICENSED
CARLITO M. DAYAG
46701
PROFESSIONAL ENGINEER

SEALING OF THIS DRAWING DOES NOT IMPLY OR CONSTITUTE THAT RIGID GLOBAL ENGINEER IS THE ENGINEER OF RECORD OR THE DESIGN PROFESSIONAL FOR THIS PROJECT. ONLY THE DESIGN OF THE METAL BUILDING SYSTEM AS FURNISHED BY RIGID IS INCLUDED. FOUNDATION ANALYSIS, ELECTRICAL, AND MECHANICAL SYSTEMS, AND/OR OTHER PARTS SUPPLIED BY ANYONE OTHER THAN RIGID ARE SPECIFICALLY EXCLUDED. NO INSPECTION OR SUPERVISION IS IMPLIED.

ISSUE	DESCRIPTION	DATE	DRN.	CHK.	DES.
A	PERMIT	12/02/21	MRR	RCR	MRR

RIGID GLOBAL BUILDINGS
18933 Aldine Westfield
Houston, Tx. 77073
Phone : (281) 443-9065
Fax : (281) 443-9064

DESCRIPTION	DETAIL DRAWINGS
CUSTOMER	Tekton Custom Homes, LLC
END USER	Bruce Peck
END USE	Shop — BUILDING A
STREET	201 2nd Ave.
CITY ST ZIP	Severance, CO 80546

SALES NO.: 71792 | JOB NO.: 157132 | SCALE: N.T.S. | DWG. NO.: E08-0001-01 | REVISION:

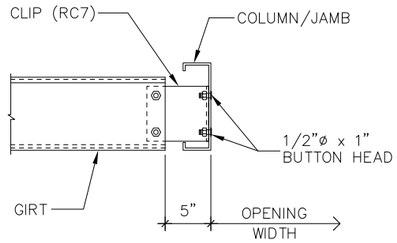

K2 GIRT TO FRAMED OPENING JAMB

ALL BOLTS ARE 1/2"ø x 1" A307 U.N.

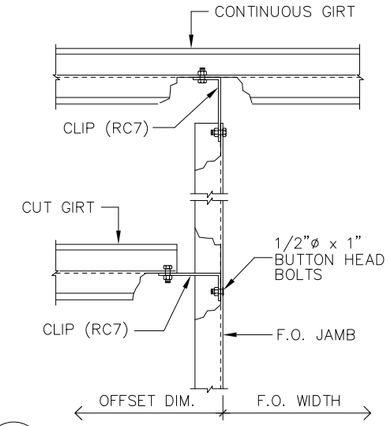

L6 F.O. JAMB TO GIRT

ALL BOLTS ARE 1/2"ø x 1" A307 U.N.

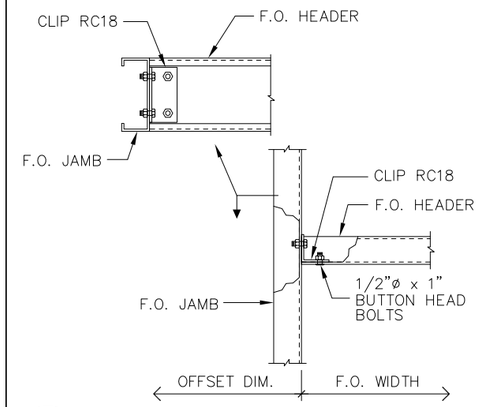

M1 F.O. HEADER TO F.O. JAMB

ALL BOLTS ARE 1/2"ø x 1" A307 U.N.

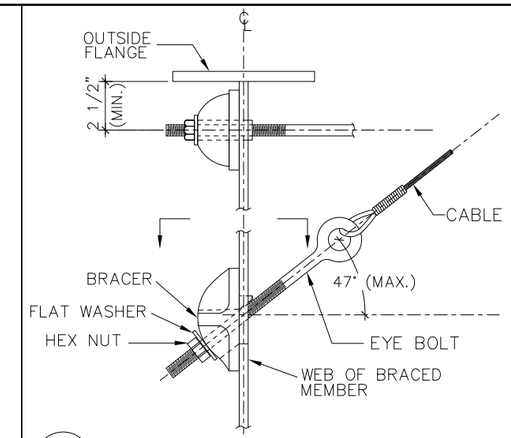

Q2 CABLE BRACE CONNECTION DETAIL

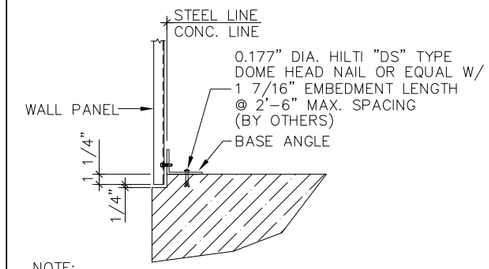

NOTE:
METAL WALL SHEETS SHALL BE SET 1/4" ABOVE CONC. NOTCH. METAL SHEETS SHOULD NOT TOUCH THE CONC. NOTCH, WHICH WOULD VOID THE WARRANTY.

T3 SECTION THRU WALL PANEL AND CONCRETE FOUNDATION

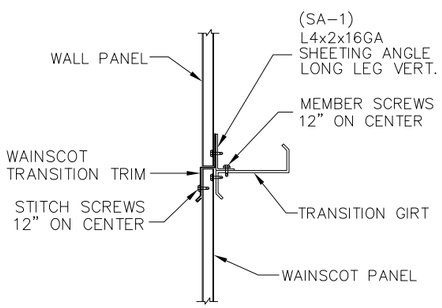

T18 WAINSCOT TRANSITION DETAIL

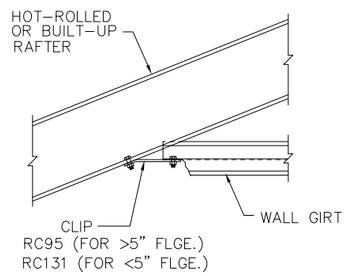

W3 ENDWALL GIRT TO RAFTER CONECTION

ALL BOLTS ARE 1/2"ø x 1" A307 BOLTS

FOR PERMIT

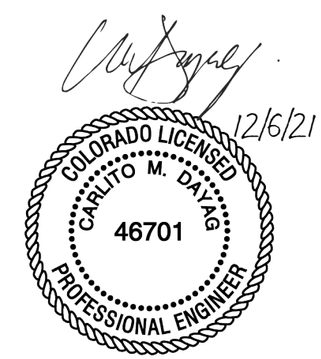

SEALING OF THIS DRAWING DOES NOT IMPLY OR CONSTITUTE THAT RIGID GLOBAL ENGINEER IS THE ENGINEER OF RECORD OR THE DESIGN PROFESSIONAL FOR THIS PROJECT. ONLY THE DESIGN OF THE METAL BUILDING SYSTEM AS FURNISHED BY RIGID IS INCLUDED. FOUNDATION ANALYSIS, ELECTRICAL, AND MECHANICAL SYSTEMS, AND/OR OTHER PARTS SUPPLIED BY ANYONE OTHER THAN RIGID ARE SPECIFICALLY EXCLUDED. NO INSPECTION OR SUPERVISION IS IMPLIED.

ISSUE	DESCRIPTION	DATE	DRN.	CHK.	DES.
A	PERMIT	12/02/21	MRR	RCR	MRR

RIGID GLOBAL BUILDINGS
18933 Aldine Westfield
Houston, Tx. 77073
Phone : (281) 443-9065
Fax : (281) 443-9064

DESCRIPTION	DETAIL DRAWINGS		
CUSTOMER	Tekton Custom Homes, LLC		
END USER	Bruce Peck		
END USE	Shop	BUILDING	A
STREET	201 2nd Ave.		
CITY ST ZIP	Severance, CO 80546		
SALES NO.: 71792	JOB NO.: 157132	SCALE: N.T.S.	DWG. NO.: E09-4021-01

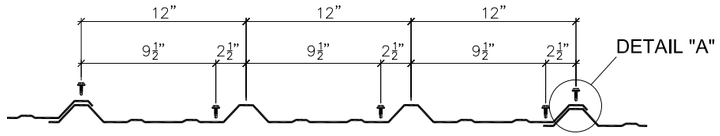

MEMBER SCREW LOCATION
FOR ALL MEMBERS UNLESS NOTED OTHERWISE

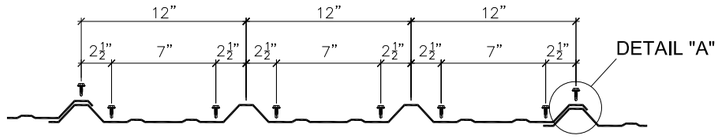

MEMBER SCREW LOCATION
FOR PEAK PURLIN, EAVE STRUT, AND PANEL END LAPS ONLY

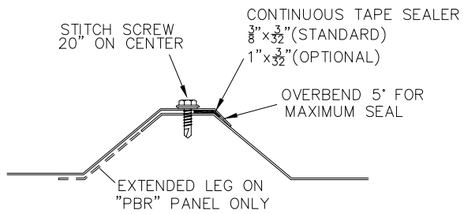

DETAIL "A"
TYP. SIDE LAP DETAIL

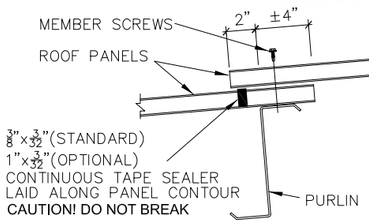

DETAIL "B"
TYP. PANEL END LAP DETAIL

NOTE!
SCREW PATTERNS SHOWN, SATISFY UL-90 REQUIREMENT FOR ROOF.

1 ST01 "R" and "PBR" ROOF PANEL SCREW LAYOUT

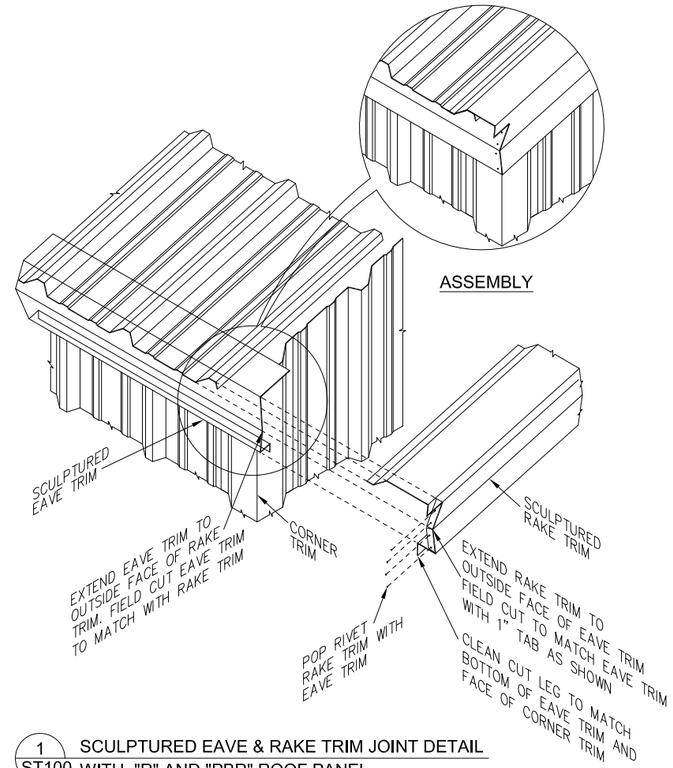

1 ST100 SCULPTURED EAVE & RAKE TRIM JOINT DETAIL WITH "R" AND "PBR" ROOF PANEL

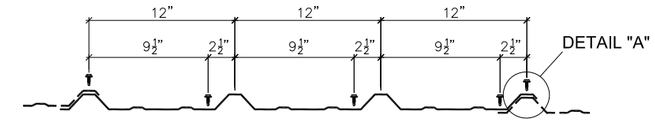

MEMBER SCREW LOCATION
FOR ALL MEMBERS UNLESS NOTED OTHERWISE

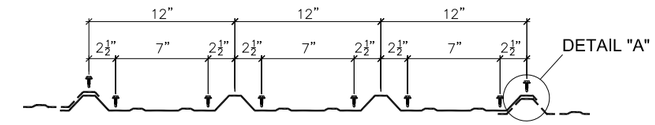

MEMBER SCREW LOCATION
FOR BASE, EAVE, RAKE, AND PANEL END LAPS ONLY

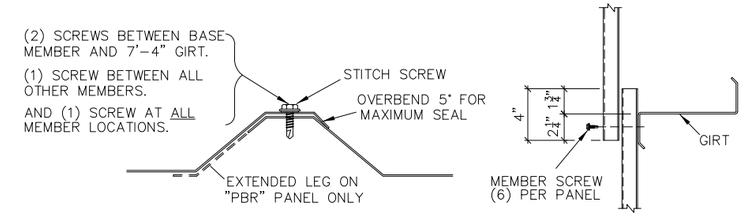

DETAIL "A"
TYP. SIDE LAP DETAIL

DETAIL "B"
TYP. PANEL END LAP DETAIL

1 ST03 "R" and "PBR" WALL PANEL SCREW LAYOUT

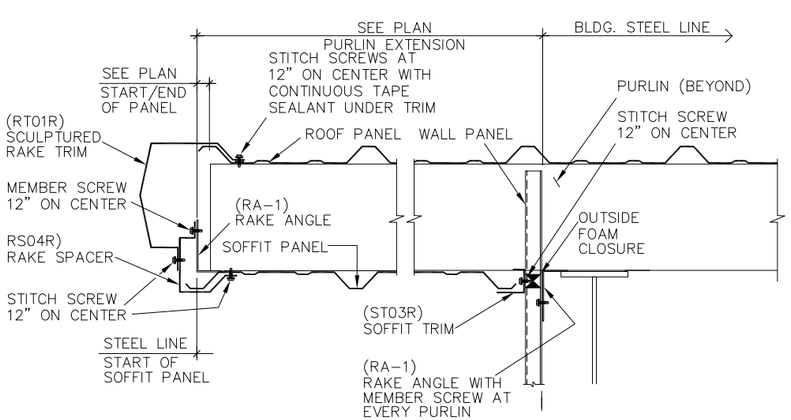

2 ST63 SCULPTURED RAKE DETAIL WITH PURLIN EXTENSION CANOPY WITH SOFFIT "R" AND "PBR" ROOF PANEL

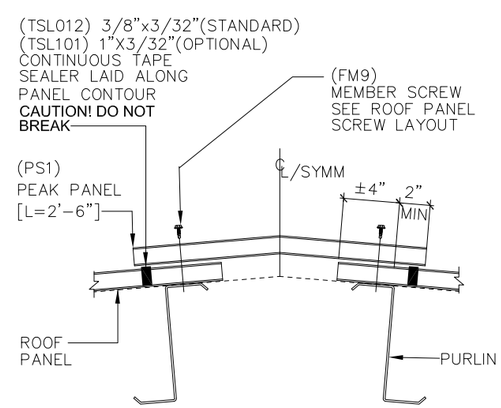

1 ST52 DETAIL PEAK w/ "PBR" ROOF

FOR PERMIT

12/6/21

COLORADO LICENSED
CARLITO M. DAYAG
46701
PROFESSIONAL ENGINEER

SEALING OF THIS DRAWING DOES NOT IMPLY OR CONSTITUTE THAT RIGID GLOBAL ENGINEER IS THE ENGINEER OF RECORD OR THE DESIGN PROFESSIONAL FOR THIS PROJECT. ONLY THE DESIGN OF THE METAL BUILDING SYSTEM AS FURNISHED BY RIGID IS INCLUDED. FOUNDATION ANALYSIS, ELECTRICAL, AND MECHANICAL SYSTEMS, AND/OR OTHER PARTS SUPPLIED BY ANYONE OTHER THAN RIGID ARE SPECIFICALLY EXCLUDED. NO INSPECTION OR SUPERVISION IS IMPLIED.

ISSUE	DESCRIPTION	DATE	DRN.	CHK.	DES.
A	PERMIT	12/02/21	MRR	RCR	MRR

RIGID GLOBAL BUILDINGS
18933 Aldine Westfield
Houston, Tx. 77073
Phone : (281) 443-3065
Fax : (281) 443-3064

DESCRIPTION	DETAIL DRAWINGS		
CUSTOMER	Tekton Custom Homes, LLC		
END USER	Bruce Peck		
END USE	Shop	BUILDING	A
STREET	201 2nd Ave.		
CITY ST ZIP	Severance, CO 80546		
SALES NO.: 71792	JOB NO.: 157132	SCALE: N.T.S.	DWG. NO.: ENclosure 1 of 1

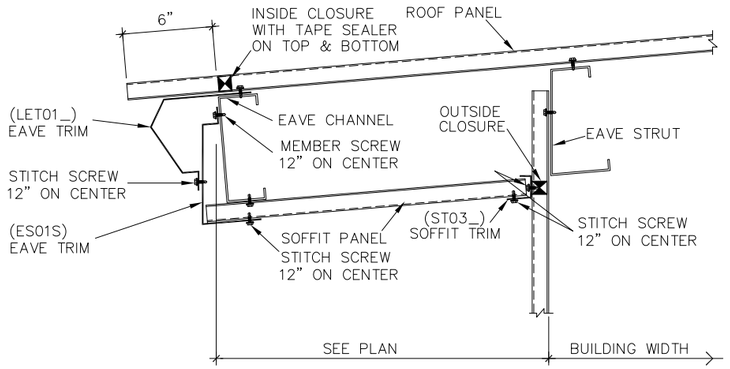

EAVE CANOPY/EXTENSION DETAIL
SCULPTURED EAVE TRIM WITH SOFFIT PANEL

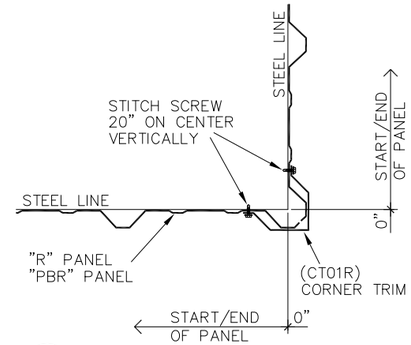

OUTSIDE CORNER DETAIL
ON MODULE

NOTES:
1. FOR 3070, 4070, 6070 WALK DOORS ONLY
2. ALL DOORS ARE FIELD LOCATED UNLESS SHOWN IN A.B. PLAN
3. ✱ - DIMENSION VARIES. SEE WALL ELEVATION IF REQUIRED.

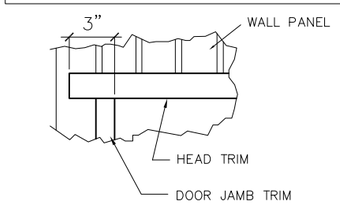

HEAD/JAMB TRIMS CORNER DETAIL

INSTALLATION PROCEDURE

1. Place head section and jambs on flat surface (floor) with door side up. Install bolts and nuts connecting head to jambs. Be sure that head is tight to jambs so that the proper door opening is obtained.
2. Install door leaf in frame, check for 1/8" clearance at head and 3/32" clearance at stricker jamb.
3. Tilt up the entire assembly and anchor hinge jamb to floor. Plumb hinge jamb and assembly. Field cut girts if required.
4. Anchor head and striker jamb to building structure, floor and entire frame to panel skins (field cut). Install optional threshold anchor if desired. Install jamb extensions (if req'd).
5. Install lockset. Install (optional) weatherstrip, head member first. Adjust so that vinyl just contacts door when in the closed position. Do not force vinyl against door as this will interfere with the latching and will not improve the weather seal.
6. Refer also to Door Manufacturer Installation Manual for more details.

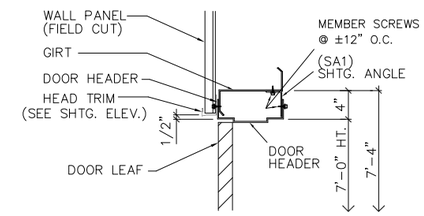

SECTION "A"

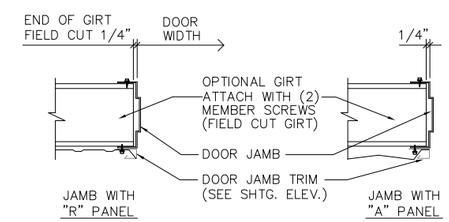

SECTION "B"

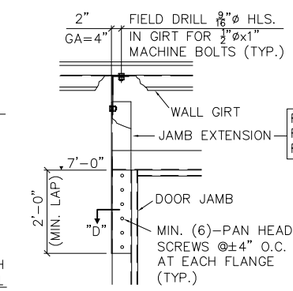

DETAIL "C"

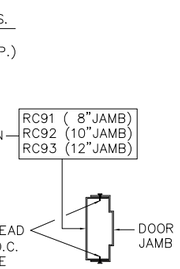

SECTION "D"

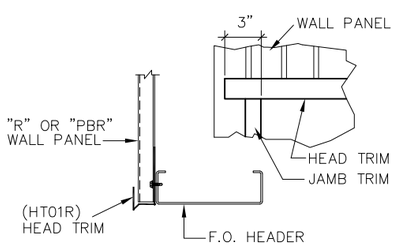

F.O. HEADER TRIM DETAIL

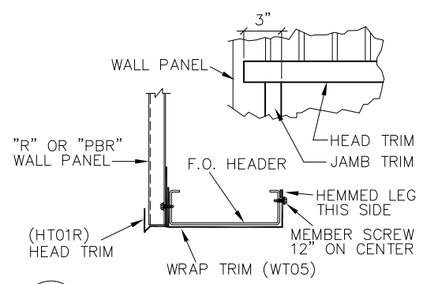

F.O. HEADER TRIM DETAIL
WITH WRAP TRIM
(AT OVERHEAD DOOR)

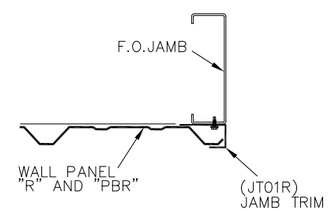

F.O. JAMB TRIM DETAIL

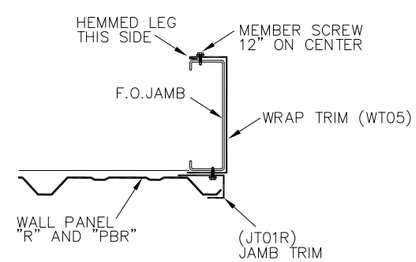

F.O. JAMB TRIM DETAIL

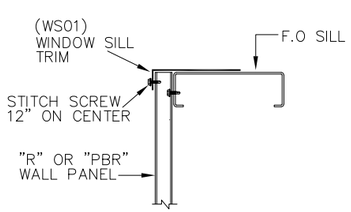

F.O. SILL TRIM DETAIL
FOR GLASS

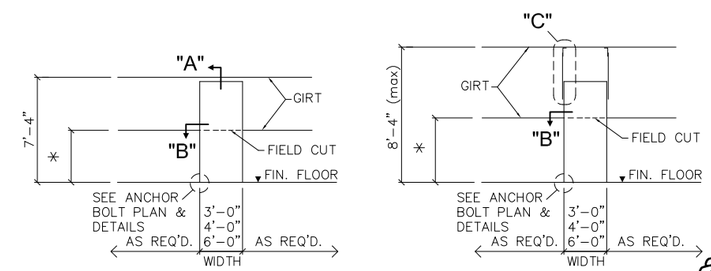

1 AC09 TYPICAL WALK DOOR DETAIL

12/6/21

COLORADO LICENSED
CARLITO M. DAYAG
46701
PROFESSIONAL ENGINEER

FOR PERMIT

SEALING OF THIS DRAWING DOES NOT IMPLY OR CONSTITUTE THAT RIGID GLOBAL ENGINEER IS THE ENGINEER OF RECORD OR THE DESIGN PROFESSIONAL FOR THIS PROJECT. ONLY THE DESIGN OF THE METAL BUILDING SYSTEM AS FURNISHED BY RIGID IS INCLUDED. FOUNDATION ANALYSIS, ELECTRICAL, AND MECHANICAL SYSTEMS, AND/OR OTHER PARTS SUPPLIED BY ANYONE OTHER THAN RIGID ARE SPECIFICALLY EXCLUDED. NO INSPECTION OR SUPERVISION IS IMPLIED.

ISSUE	DESCRIPTION	DATE	DRN.	CHK.	DES.
A	PERMIT	12/02/21	MRR	RCR	MRR

RIGID GLOBAL BUILDINGS
18933 Aldine Westfield
Houston, Tx. 77073
Phone : (281) 443-9065
Fax : (281) 443-9064

DESCRIPTION	DETAIL DRAWINGS		
CUSTOMER	Tekton Custom Homes, LLC		
END USER	Bruce Peck		
END USE	Shop	BUILDING	A
STREET	201 2nd Ave.		
CITY ST ZIP	Severance, CO 80546		

SALES NO.:	JOB NO.:	SCALE:	DWG. NO.:	SHEET:
71792	157132	N.T.S.	EI-AC09	1

BUILDER:
TEKTON CUSTOM HOMES, LLC
1635 FOXTAIL DRIVE
LOVELAND, CO 80538

LOT=7,000 +\-
SQUARE FOOTAGE

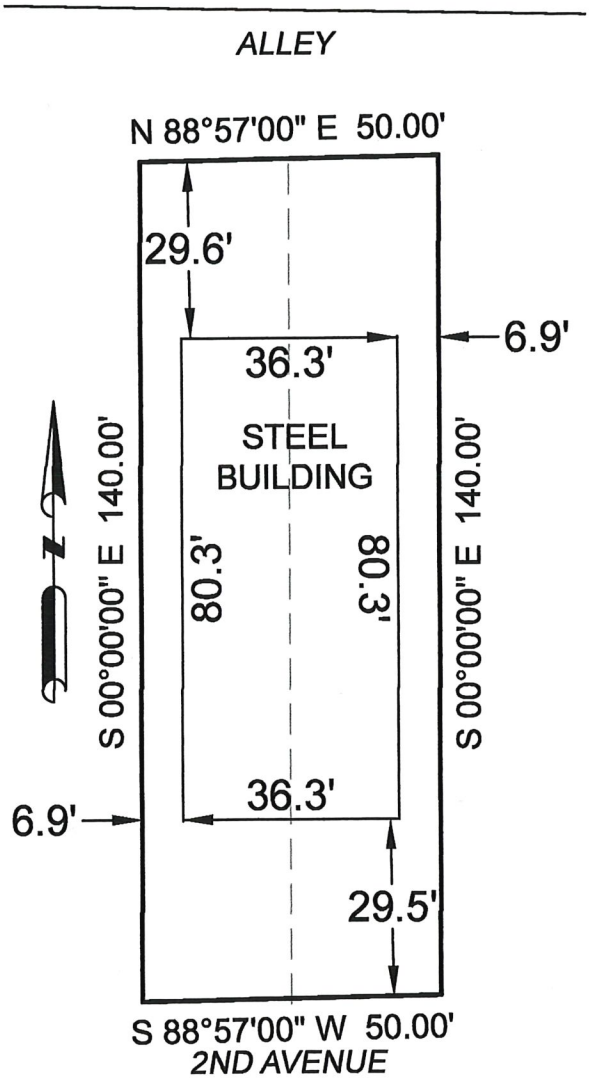

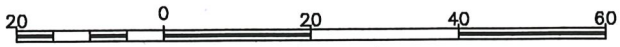

(IN US FEET)
1 inch = 20 ft.

SITE PLAN
NSN ~~201~~ 2ND AVENUE
LOT 5 & 6 BLOCK 3
TOWN OF SEVEREANCE
WELD COUNTY, COLORADO

SCALE: 1" = 20'	CDS Engineering Corporation 165 2nd ST SW LOVELAND, COLORADO 80538 (970) 667-8010	TEKTON CUSTOM HOMES, LLC	PROJECT NO. P21-1272
DATE: 01/10/2022			DRAWING NO.
			REVISION NO.
DRAWN: sdw CHECKED: saw			SHEET 1 OF 1

03-B-22
Peck
2nd Ave Severance, CO

Not to scale

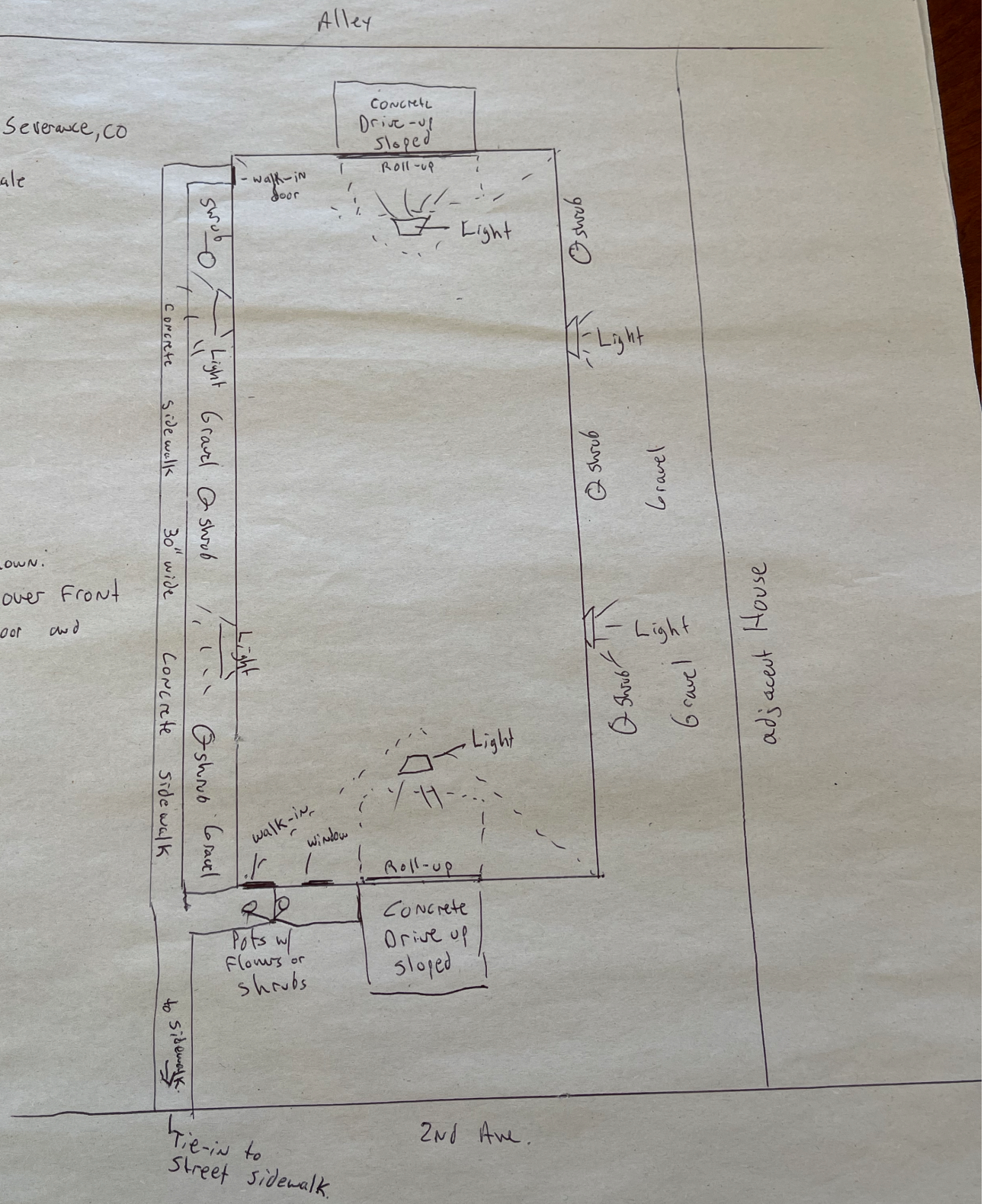

1.) Not shown.
Awning over Front walk-in door and window.

BUILDER:
TEKTON CUSTOM HOMES, LLC
1635 FOXTAIL DRIVE
LOVELAND, CO 80538

LOT=7,000 +\-
SQUARE FOOTAGE

GUTTER DOWNSPOUTS TO BE INSTSALLED DIRECTED SOUTH ON THE SOUTH SIDE OF BUILDING AND NORTH ON THE NORTH SIDE OF BUILDING

TOWN OF SEVERANCE DEVELOPMENT REVIEW
Submittal Type: Modified Site Plan
Submittal No: 5
Project Name: 121 W. 2nd Avenue
Project No: 0042.0021.00
Reviewed By: AKM/CEM
Review Date: May 11, 2022

No Comments

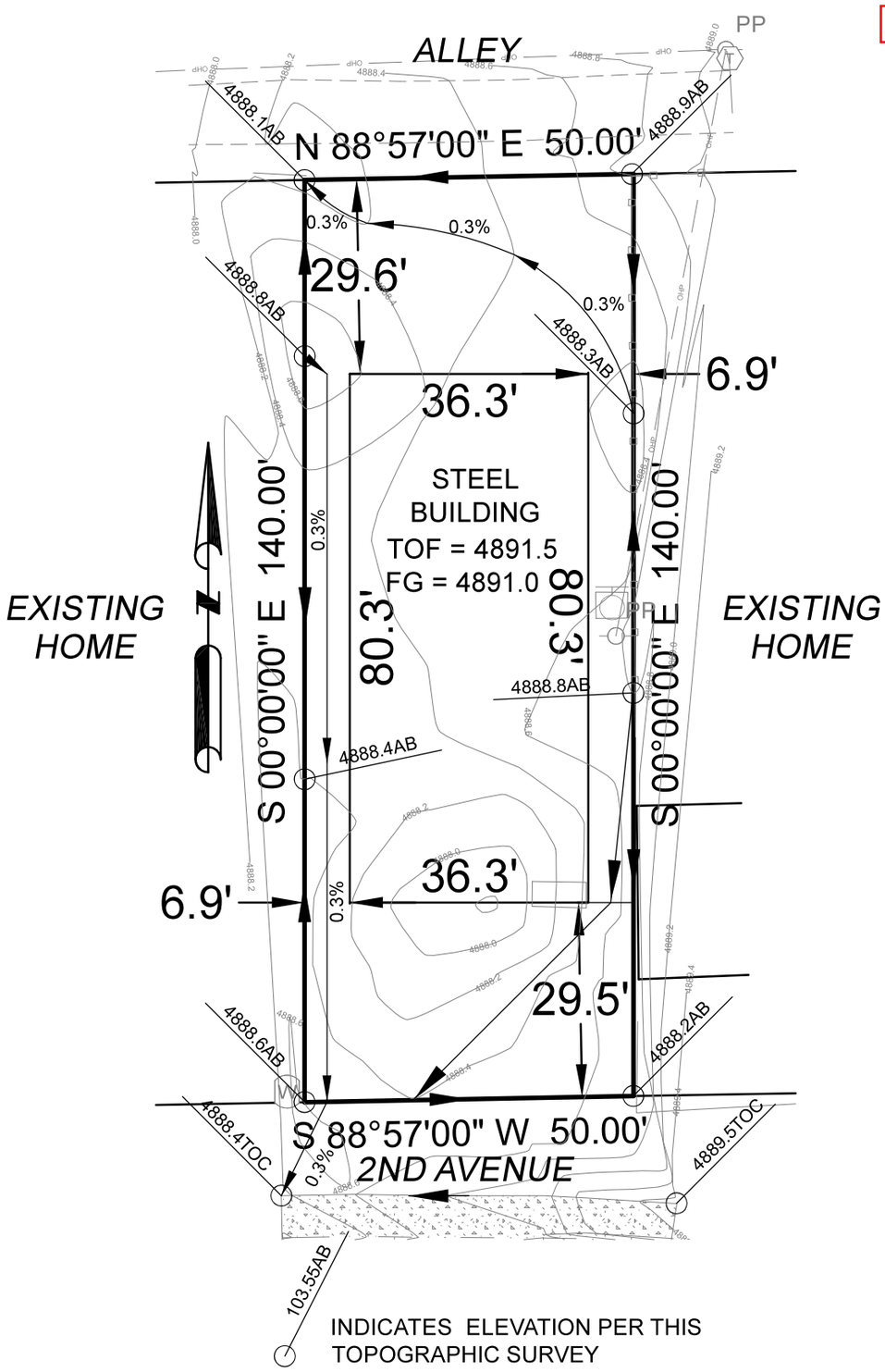

INDICATES ELEVATION PER THIS TOPOGRAPHIC SURVEY

BERMS MAY BE REQUIRED WITH THE DRAINAGE SWALE(S) TO KEEP STORMWATER ON THE SUBJECT PROPERTY AND TO PROVIDE DRAINAGE TO ALLY AND 2ND AVENUE

20 0 20 40 60

(IN US FEET)
1 inch = 20 ft.

SITE PLAN
121 2ND AVENUE
LOT 5 & 6 BLOCK 3
TOWN OF SEVERANCE
WELD COUNTY, COLORADO

SCALE: 1" = 20'		CDS Engineering Corporation 165 2nd ST SW LOVELAND, COLORADO 80538 (970) 667-8010	TEKTON CUSTOM HOMES, LLC	PROJECT NO. P21-1272
DATE: 05/10/2022				DRAWING NO.
				REVISION NO. 4
DRAWN: sdw	CHECKED: saw			SHEET 1 OF 1

Bruce Peck
429 Whitney Harbor
Windsor, CO 80550
brucelpeckjr@yahoo.com
808-256-8480

01/25/2022

Lighting Plan for NSN 2nd Ave Severance, CO Building Project

Severance Town Board and Planners,

My lighting plan for my project at NSN 2nd Ave is as follows:

1 over-rollup door mounted LED flood/security light mounted over the front and rear roll-ups facing 2nd Ave and the alleyway behind.

2 LED flood/security lights mounted high toward the roof line on each side of the building not facing the road or alley.

Interior lighting installed TBD

All lights on switch or smart controls.

Thank you,

Bruce Peck

Bruce Peck
429 Whitney Harbor
Windsor, CO 80550
808-256-8480

03/12/2022

Additional information provided on request for project submittal:

Statement of intent: My objective is to build a high quality, aesthetically pleasing multi-use building on my lot on 2nd ave Severance. I have added features like an elevated foundation with one foot frost walls, instead of building directly on slab, three foot conforming color wainscot wrap around the entire building, an awning over the front walk-in door and window, and the remainder of the lot will be tastefully landscaped with mostly large washed gravel and some shrubs around the perimeter. I plan to use this building for personal garage/storage/multi use, workshop etc. I have designed it so it will be drive though from alley to street in the event we decide to put an RV or large camper, boat etc inside when not using it. I have also designed it with the possibility of converting it to some type of conforming commercial use in the future, or operating part of it for personal use and part for commercial use. I have owned that lot for 10 plus years and believe it will add value to the surrounding properties and my use will not in any way be a nuisance to the surrounding residents. In fact it will be a vast improvement to the empty lot as it sits now, growing over and not being utilized for anything.

1. The following are responses to the list of items sent by the town in regards to proper land use and conflicting prevention with adjacent properties:

a. What sort of activities will be occurring on site? Personal vehicle and property storage, personal workshop (light auto maintenance, home projects etc) possibly a personal workout space- weights, exercise equipment etc no indoor sports courts etc will be installed or group sports etc.

b. Will any noise be produced? Very little noise, and because I will not be there frequently, or using it at late/off hours the noise impact should be nil.

c. Are deliveries expected and at what frequency? No deliveries expected, I will be using my personal residence for all mail and deliveries to me. I do not plan to use this address for mail, package delivery etc.

d. Additionally, what is envisioned for the future “commercial use”? Possibly a business that needs a small storefront/office space and storage for product, engineering work, etc.

e. How many people are anticipated to work on-site? 2-3

f. Will there be additional traffic resulting from the use? No. I will probably use the building infrequently. If any traffic it will be just myself and vehicle most of the time.

g. How will parking be accommodated now and in future? Parking will be in the building or on the entrance to either roll up door, entirely on the property. There will be no need for street or off property parking.

2. I believe the design, materials, and colors of this building and the landscaping will complement the adjacent homes and be an improvement to the existing structures located adjacent and across the alley and street from my project.

3 and 4. The following are the material type and colors. The Wainscoting will wrap around the entire building.

Walls/Trim: Steel panel Gallery Blue
Roof and Wainscot: Steel panel Desert Sand
These can be seen on Rigid Global building's website:

https://www.rigidbuilding.com/steel-buildings-product-info/spectralite-2000-color-chart/

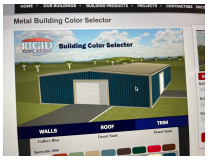

5. The building has large roll up doors centered and facing the street and alley. The front of the building (facing 2nd ave) also will have a walk in door and a window installed on the left front as you face the building. I will have an awning planned and installed over the door and window in order to give the entryway a more formal appearance.

6. I plan to put low water requirement shrubs along the length of the building on both sides. I will put two large pots with perennials during the warmer months around the from entry door. The remainder of the landscaping will be washed 3-4 inch rock fill in between the building and property line and between the sidewalk and building. irrigation will be manual or from non potable water supplied by a well currently located on the lot. See additional site plan info, attached.

7. Deliveries, personal parking etc will be done on the alley side of the building. I do not plan to do a paved driveway from the street or alley to the roll-up doors. I do plan to pour a concrete run-up inside the property line to meet upslope requirement from ground to slab level and to provide a smooth, aesthetic approach to the interior floor.

8. Off street parking- since I only plan to have one or two personal vehicles on location at any time parking will be either inside the building or on the lot on the approaches to the roll up doors.

9. Sidewalk on side of the building- see plot plan addition

10. Sidewalk added. see plot plan addition

11. Side setbacks- when I planned and contracted for this building I understood it would be approved as an allowed use with just a permit. I misinterpreted the setback requirements, believing this fell under the "accessory building" requirements. As a result I have already ordered a metal building package that is complete and being stored by the manufacturer. The dimensions of the build cannot be changed so I respectfully would ask for a variance from the current requirements. I am 6 inches too wide on each side of the plan.

12. Wall mounted lighting- Two light directional fixtures on each side and an overhead entry light over each roll-up door. Fixtures will be directional and will focus light downward and to the sides. I will use soft white light bulbs (3500k or less per recommendation) and select fixtures

that shield adjacent properties from direct light. Lighting will be smart control via an app and cell phone as well as switched inside the building. see site plan addition

13. Fencing- I don't currently have an established fencing plan but do plan to fence the perimeter of the lot with 6 foot side and 42 inch front and back black metal fencing. Will be vertical metal spaced fence rods with gap in between. Not privacy type fencing.

14. Grading- foundation height will be elevated at least two feet above corner heights in order to facilitate proper drainage to street gutters etc elevation numbers to be furnished.

15. Trash will be handled by local commercial vendor. I don't not anticipate much trash generation from the property. There will be no bins, dumpsters etc left outside the building at any time except removal days.

16. No utility or mechanical equipment will be on site. personal power tools, portable air compressor, etc about the extent of equipment.

17. Future commercial use- I am designing the building for possible future water/sewer hookups, etc and understand conversion to commercial use will require a new site plan and likely extensive addition etc to conform.

COMMUNITY DEVELOPMENT STAFF REPORT

Project Name: 121 W. 2nd Avenue Site Plan

Land Use Process: Site Plan

Public Hearing Dates : Planning Commission **June 15th**, and Town Council **July 12**

Report Date: 3.04.2022 Revised: 5.27.2022

Vicinity Map:

PUBLIC NOTIFICATION AND REFERRALS

Notice of the Planning Commission and Town Council public hearing was mailed to all property owners within 1000 feet of this proposed project.

A sign notifying the public that the property was under review for development was posted a minimum of 15 days ahead of the Planning Commission hearing.

The public hearing was also posted in the newspaper of record a minimum of 15 days ahead of the Planning Commission hearing.

Referral Agencies Involved

- ✓ Windsor-Severance Fire District
- ✓ Unites States Postal Service
- ✓ TDS Telecom
- ✓ Weld RE 4 School District
- ✓ XCEL
- ✓ PVREA
- ✓ Century Link
- ✓ Windsor Planning Department
- ✓ Colorado Department of Transportation
- ✓ SAFEBuilt
- ✓ State of Colorado DNR
- ✓ Great Western Trail Authority
- ✓ Clearview Library District
- ✓ Water Supply and Storage
- ✓ Northern Water
- ✓ Weld County Planning/Public Works
- ✓ North Weld County Water District
- ✓ Loup Reservoir
- ✓ Eaton Ditch
- ✓ Light Gig

Any and all referrals are located in the packet. The referral comments will be forwarded to the applicant as received and included in the packet materials for each hearing.

For any questions regarding comments or concerns with the project please contact Abdul Barzak, Town Planner at abarzak@townseverance.org or by phone at 970-686-1218.

NEIGHBOR COMMENTS

Please see Public Hearing Background and Summary section of this document.

PROJECT DESCRIPTION

Bruce Peck, owner of 121 W. 2nd Avenue has submitted a Special Use Review application to prepare for the development of a personal office/workshop. The 7,000 SF lot is currently vacant with proposed improvements including a 2,880 SF metal building, paved driveways, a paved walkway along the west side of the building, a perimeter metal fence with gates, and washed rock for landscaping. The subject property is zoned Town Core, which is intended for a diverse array of land uses interspersed. To achieve a high-quality mixed-use Town Core, certain design features must be adhered to, to improve compatibility and successful integration of different land uses. Design elements such as architecture, fencing, lot layout, and landscaping are important considerations. The comments below are meant to support good design and guide the applicant towards design decisions that will help achieve the Town's vision.

OVERALL STAFF COMMENTS

TOWN ENGINEER

See packet

TOWN MANAGER

See packet

TOWN ATTORNEY

Town Attorney is working with Town Staff to finalize an Agreement Prior to Town Council.

TOWN PLANNER

As a part of the Severance: Hometown | Vision code (Code), an applicant is required to submit a Site Plan. The applicant prepared a Site Plan that is included in your packet. Overall, the Site Plan is missing information that is needed for a complete review of the project. Staff has reviewed the Plan and has the following comments below.

What is the theme of the development?

Staff: The proposal is to develop a personal workshop that could transition to a commercial use in the future. The subject property is located on a residential block with commercial uses across 2nd Avenue. To increase compatibility of the warehouse and mitigate the visual impact of the development, the facades should incorporate a material other than metal, that will better blend with the adjacent residential uses. Additionally, the landscaping proposed will need to be enhanced.

How does the development theme and pattern support:

The Comprehensive Plan

Staff: In accordance with the Comprehensive Plan, the subject property is intended to be developed as commercial, residential, or mixed use, primarily with businesses that provide services for the surrounding residents. The use proposed is difficult to classify and would typically be designated as an accessory use to

another principal use. Staff has asked the applicant to provide more information on the use and potential future use of the building to ensure it conforms to the Town's future land use map and the stated goals of the Comprehensive Plan. The future land use designated for the subject property is Town Core. Applicant has provided additional information (included in packet)

The Zoning District

Staff: The application could better support the intent of the Town Core zone by incorporating several design features that can improve compatibility and successful integration of different land uses. Moreover, if the property were to transition to a commercial use in the future, additional requirements may be triggered at the time the property connects to water and sewer.

Density

Staff: No concern

Diversity

Staff: No concern

Land Use

Staff: The proposal is to build a personal warehouse on the lot, which is not a use explicitly listed in the Town Core zone, but could be allowed with additional review. Residential is located to the north, west, and east of the property with commercial/industrial to the south. As noted previously, design features and enhanced landscaping should be incorporated at this stage to help visually integrate the development.

Connectivity

Staff: No concern

Open Space

Staff: No concern

What is the roadway network associated with this development?

Staff: This project is considered infill development and will integrate into the existing roadway network. Staff has requested a single (one) access to be taken from the alley.

What treatments are applied to the roadways on the perimeter and internal to the development?

Staff: The applicant has proposed rock to satisfy the landscaping requirement. Staff has requested the applicant revisit the landscape concept and incorporate a mix of irrigated turf, shrub beds, and trees throughout the site, as well as foundation planting beds and entrance landscaping. Applicant has included a plot plan that shows shrubs and potted plants

What is the lot layout associated with this development?

Staff: Lot will remain as currently platted.

How does the lot layout interface with the roadway network?

Staff: The site is located off of West 2nd Avenue. The proposal states two driveways, one coming off of 2nd Avenue and one off of the alley.

How is lot diversity accomplished?

Staff: N/A

What are the setbacks proposed for each lot?

Staff: The front and rear setbacks meet code requirements. 6.9' setbacks are proposed for the sides where a minimum of 7.5' from property lines is required. Applicant is requesting a variance on side setback requirements.

How do the street designs, lot sizes and setbacks enhance the streetscape?

Staff: N/A

Where are the common areas in the subdivision?

Staff: N/A

What are the purposes of the common areas in the subdivision?

Staff: N/A

How are the common areas finished?

Staff: N/A

How are the common areas managed?

Staff: N/A

What is the fencing plan for the development?

Staff: A metal fence is proposed to enclose the property. Staff has asked the applicant to comply with the front yard fencing requirements and incorporate brick or stone columns.

What amenities are included in the development?

Staff: N/A

How are amenities managed?

Staff: N/A

How are the entries to the development enhanced?

Staff: Staff has requested additional and enhanced landscaping near the entry along with foundation plantings along the front and sides of the building where practical. Applicant has included a plot plan that shows shrubs and potted plants

How is connectivity within and outside the development achieved?

Staff: Existing platted lots- infill development.

How are architectural and landscape designs on individual lots managed?

Staff: N/A

What is the irrigation system, including sources of water?

Staff: Currently no irrigation is being proposed. Staff has asked for landscaping and irrigation. Applicant has included a plot plan that shows shrub and potted plants, applicant has stated he intends to hand water the shrubs/plants. Staff will include a landscape maintenance provision in the agreement.

How is potable water supplied to the project?

Staff: Town of Severance Applicant is not requesting water services at this time.

Is there adequate potable water obtainable for the project?

Staff: N/A

How is storm water being managed?

Staff: N/A

How will common area landscape be maintained?

Staff: N/A

How will the development handle sanitary sewer?

Staff: Will not connect to sewer at this stage.

How is off street parking being addressed?

Staff: Application did not include information on off-street parking. Staff has requested more information. Applicant has stated that all parking will be handled on the lot, no on street parking.

How is exterior lighting being addressed?

Staff: Cut off lighting will be required. Applicant to adhere to Severance Land Use Code and Dark Skies Zoning Requirements. Staff would like the applicant to use residential lighting fixtures and a softer white bulb temperature (3500K) due to the proximity next to the residential homes.

What is the potential impact on adjacent neighborhoods?

Staff: Residential lots are located to the north, west, and east of the property. Potential for visual, noise, and light impacts from the use.

Noise or smells are associated with the development, what are the plans for mitigation?

Staff: Applicant will need to specify hours of operation and better describe the nature of the use. Applicant has stated that this project is for personal use, any future commercial uses would require a full site plan.

Are there existing or proposed mineral development/Oil & Gas?

Staff: N/A

What is the state of ownership of Oil & Gas minerals?

Staff: N/A

How are conflicts between project and Oil and Gas development managed?

Staff: No concerns

RECOMMENDATION TO PLANNING

Staff recommendation: Staff is recommending Planning Commission forward a recommendation of approval to the Town Council. Town staff is working with legal to generate an agreement that includes:

- Landscape Warranty/Maintenance
- Additional Features including and awning facing W. 2nd Ave
- Private Sidewalk to connect to the public walk on W. 2nd Ave
- Any future changes of use will require a Site Plan

RECOMMENDATION TO TOWN COUNCIL

Staff recommendation: To be determined based on Planning Commission Feedback

1. The proposal seeks to establish a “personal work/office space” in a metal shop building on a residential block. While the zoning is Town Core, which allows for a wide variety of uses, “personal shops” are typically considered accessory uses that are associated with a principal use. For the purposes of this review, clarification is needed on what this use is, so appropriate standards can be applied. A key objective of the Land Use Code is to create a land use pattern that prevents conflict between adjacent uses. Not all land uses are inherently compatible. In the project description, please provide more detailed information on what “personal work and office space” entails.
    a. What sort of activities will be occurring on site?
    b. Will any noise be produced?
    c. Are deliveries expected and at what frequency?
    d. Additionally, what is envisioned for the future “commercial use”?
    e. How many people are anticipated to work on-site?
    f. Will there be additional traffic resulting from the use?
    g. How will parking be accommodated now and in future?
2. From a functional standpoint, the lot can be characterized as residential. To improve compatibility of character in the area, the building will need to incorporate design features that complement the adjacent homes and landscaping to help better blend the development with the adjacent lots. The Town Core zoning district is intended to be the vibrant and diverse center of Town and support the theme of a charming and active small Town. Design elements, materials and site planning techniques are required to support this vision.
3. Per Sec. 16.6.30.7, architecture should be reflective of the regional character of urban buildings. Please consider the use of insulated vertical panels on all sides of the building with the wainscoting wrapping around the entire building. These panels can include stucco like texturing or other treatments that could help the building fit into the built environment.
4. Please include information on the wainscot material and proposed colors- provide the manufacturers’ colors and materials.
5. The building needs to incorporate windows with awnings facing the public right-of-way. The bay door is not enough to meet this requirement.
6. Per Sec. 16.6.30.8, the project is required to have high-quality landscaping and should incorporate the following:
    a. A mix of irrigated turf, shrub beds, ornamental/evergreen/shade trees throughout the site. Drought tolerant species are encouraged.
    b. Foundation plantings along the front and sides of the building to help the project better fit into the residential context of the area.
    c. Entryways shall incorporate a landscape component which could include large pots or planting beds.
    d. Please revisit the landscaping and submit a landscaping and irrigation plan with the next submittal. The plan doesn’t need to be overly complex, but does need to identify planting locations, plant materials/species/quantity/size, and how the plants will be irrigated.
7. Per Sec. 16.6.30.7, it is expected that in the Town Core deliveries, parking, and access be taken off of the alley. Please eliminate the driveway off of 2nd Avenue. On the site plan, label and dimension the paved access off of the alley.

8. Will there be any off-street parking? If so, please label and dimension the parking spaces on the site plan.
9. Label and dimension the paved walkway along the side of the building on the site plan.
10. Please add a paved walkway connecting the front entrance of the building to the front property line.
11. The side setbacks do not meet the requirements prescribed in code, which is 7.5'. Please revise.
12. Please include a detail showing all wall-mounted lighting. Please note that all lighting shall adhere to the Dark Skies Ordinance and light cannot spill beyond the boundary of the project. Staff would like the applicant to use residential lighting fixtures with a softer white bulb temperature (3500K) due to the proximity of the residential homes.
13. Provide a dimensioned detail of the fence. Include manufacturers' colors and materials. Additionally, please show the location of the fence on the site plan denoted with a hashed line. Per Sec. 16.6.30.9, front-yard fencing shall be open wood picket or wrought iron and shall not exceed 42" in height. Brick or stone columns are highly encouraged.
14. Will any grading occur? A grading plan is required to ensure mitigation of impacts to adjacent property owners.
15. How will trash be handled? Please provide information in the project description.
16. Will there be any utility or mechanical equipment on site? If so, please show on the site plan and include details on how these areas will be screened from the public right-of-way with visual and sound mitigation for adjacent owners.
17. If the building transitions to a commercial use in the future, additional requirements may be triggered which will necessitate submittal of a new site plan.

1. The proposal seeks to establish a “personal work/office space” in a metal shop building on a residential block. While the zoning is Town Core, which allows for a wide variety of uses, “personal shops” are typically considered accessory uses that are associated with a principal use. For the purposes of this review, clarification is needed on what this use is, so appropriate standards can be applied. A key objective of the Land Use Code is to create a land use pattern that prevents conflict between adjacent uses. Not all land uses are inherently compatible. In the project description, please provide more detailed information on what “personal work and office space” entails.
    a. What sort of activities will be occurring on site?
    b. Will any noise be produced?
    c. Are deliveries expected and at what frequency?
    d. Additionally, what is envisioned for the future “commercial use”?
    e. How many people are anticipated to work on-site?
    f. Will there be additional traffic resulting from the use?
    g. How will parking be accommodated now and in future?
2. From a functional standpoint, the lot can be characterized as residential. To improve compatibility of character in the area, the building will need to incorporate design features that complement the adjacent homes and landscaping to help better blend the development with the adjacent lots. The Town Core zoning district is intended to be the vibrant and diverse center of Town and support the theme of a charming and active small Town. Design elements, materials and site planning techniques are required to support this vision.
3. Per Sec. 16.6.30.7, architecture should be reflective of the regional character of urban buildings. Please consider the use of insulated vertical panels on all sides of the building with the wainscoting wrapping around the entire building. These panels can include stucco like texturing or other treatments that could help the building fit into the built environment.
4. Please include information on the wainscot material and proposed colors- provide the manufacturers’ colors and materials.
5. The building needs to incorporate windows with awnings facing the public right-of-way. The bay door is not enough to meet this requirement.
6. Per Sec. 16.6.30.8, the project is required to have high-quality landscaping and should incorporate the following:
    a. A mix of irrigated turf, shrub beds, ornamental/evergreen/shade trees throughout the site. Drought tolerant species are encouraged.
    b. Foundation plantings along the front and sides of the building to help the project better fit into the residential context of the area.
    c. Entryways shall incorporate a landscape component which could include large pots or planting beds.
    d. Please revisit the landscaping and submit a landscaping and irrigation plan with the next submittal. The plan doesn’t need to be overly complex, but does need to identify planting locations, plant materials/species/quantity/size, and how the plants will be irrigated.
7. Per Sec. 16.6.30.7, it is expected that in the Town Core deliveries, parking, and access be taken off of the alley. Please eliminate the driveway off of 2nd Avenue. On the site plan, label and dimension the paved access off of the alley.

8. Will there be any off-street parking? If so, please label and dimension the parking spaces on the site plan.
9. Label and dimension the paved walkway along the side of the building on the site plan.
10. Please add a paved walkway connecting the front entrance of the building to the front property line.
11. The side setbacks do not meet the requirements prescribed in code, which is 7.5'. Please revise.
12. Please include a detail showing all wall-mounted lighting. Please note that all lighting shall adhere to the Dark Skies Ordinance and light cannot spill beyond the boundary of the project. Staff would like the applicant to use residential lighting fixtures with a softer white bulb temperature (3500K) due to the proximity of the residential homes.
13. Provide a dimensioned detail of the fence. Include manufacturers' colors and materials. Additionally, please show the location of the fence on the site plan denoted with a hashed line. Per Sec. 16.6.30.9, front-yard fencing shall be open wood picket or wrought iron and shall not exceed 42" in height. Brick or stone columns are highly encouraged.
14. Will any grading occur? A grading plan is required to ensure mitigation of impacts to adjacent property owners.
15. How will trash be handled? Please provide information in the project description.
16. Will there be any utility or mechanical equipment on site? If so, please show on the site plan and include details on how these areas will be screened from the public right-of-way with visual and sound mitigation for adjacent owners.
17. If the building transitions to a commercial use in the future, additional requirements may be triggered which will necessitate submittal of a new site plan.

COLORADO CIVIL GROUP, INC.
Engineering Consultants

Memo

TO: **Mr. Nick Wharton, Severance Town Administrator**
Ms. Lindsay Radcliff-Coombes, Severance Deputy Town Manager
Mr. Abdul Barzak, Severance Town Planner

FROM: **Chris Messersmith, Colorado Civil Group, Inc.**
Amber Messersmith, Colorado Civil Group, Inc.

DATE: **March 3, 2022**

SUBJECT: **121 W 2nd Ave – SITE PLAN**

CCG PROJECT NO: **0042.0021.00**

TOWN CUSTOMER ID: **274**

We have completed our review of the 121 W 2nd Ave Modified Site Plan submittal package that was received on January 26, 2022. The Land Use Application indicated the following items were included with the submittal package:

- Land Use Application
- Application Fees & Fee Agreement (not included)
- Letter of Intent
- Title Commitment (O&E Report)
- Property Tax Statement
- Mailing Labels (not included)
- Legal Description (8 ½" x 11") (not included)
- Site Plan Map
- Exterior Elevations of all Proposed Structures
- Lighting Plan (Letter)
- Vicinity Map

We offer the following engineering comments:

General:

1. The property is located at 121 W 2nd Avenue, being Lot 5 and Lot 6, Block 3 Town of Severance Plat and is being reviewed as a modified Site Plan.

2. The Letter of Intent states that the proposed metal building will be used for personal work and office space with the potential to convert it to possible commercial/personal use in the future. Our Engineering review is based on the building being used for personal use only.

3. We have reviewed the referral comments from the Windsor Severance Fire Rescue, SAFEBuilt, Severance Police Department, Severance Public Works. The following agencies had no comments: Paragon Consulting Group, PVREA, Weld RE-4, and the Town of

Windsor. There does not appear to be any conflicts between the referral comments and our engineering comments.

Title Commitment:

4. An Ownership and Encumbrance (O&E) report prepared by Land Title Guarantee Company was provided with an effective date of January 19, 2022 and indicates the owner is:

   Bruce L. Peck, Jr.

5. The legal description on the O&E Report is correct.

6. The O&E Report states that there are no encumbrances of record.

Property Tax Statement:

7. A Property Tax Statement was provided. The property appears to be included in all the required districts.

Legal Description:

8. A separately provided 8.5"x11" written legal description was not provided. The aliquot legal description is:

   Lot 5 and 6, Block 3, Map of the Town of Severance as recorded 12/31/1906 at Reception No. 115520 of the records of the Offices of the Weld County Clerk and Recorder, Town of Severance, County of Weld, State of Colorado.

Oil & Gas:

9. According to COGCC website, no oil/gas wells are located on this property.

Technical Reports:

10. The following reports are not required with this Modified Site Plan: Drainage, Utility, and Traffic.

11. Refer to SAFEBuilt referral comments regarding a Geotechnical Report.

Site Development Plan (Civil):

12. Typically, a Site Plan requires a Cover Sheet with a Vicinity Map and Approval/Signature Blocks from the following:
    Owner's Approval
    Town Engineer's Review
    Town Planning Review
    Planning Commission Approval
    Windsor Severance Fire Approval
    Mayor's Certificate
    Dry Utility Companies

13. (Access) – Access to the proposed building is off W 2nd Avenue to the south and via the gravel Alley to the north.

14. (Parking) – There is on-street parking along 2nd Avenue.

15. (Grading/Drainage) – No grading is shown on the Site Plan. The Finished Floor elevation or Top of Foundation (TOF) elevation, lot corner elevations, midpoint elevations, and flow arrows need to be shown and labeled. The TOF elevation shall be set at least two (2) feet above the highest curb (back of sidewalk) elevation fronted by the property (COG VII Section 2.5.3.11). A driveway cut for this property was installed in 2nd Avenue with the Old Town Improvements – Phase 2 project. The drainage from the two (2) lots to the east will need to reach this driveway cut, matching existing drainage patterns.

16. (Utilities) – No potable water or sanitary sewer services are proposed with this improvement. Engineering does not believe that a water or sanitary sewer service were stubbed to this property with the original utility installations. If water or sanitary services are installed in the future, this will require review by the Town and cutting and patching 2nd Avenue. The proposed and existing dry utilities should be shown on the Site Plan.

Please let us know if you have any questions or comments regarding this memo.

From: John Zacklene
To: Abdul Barzak
Subject: RE: 121 W 2nd Steet - Site Plan (Town of Severance Planning Referral)
Date: Wednesday, January 26, 2022 1:48:06 PM
Attachments: image004.png
image001.png

Will they be boring or going overhead for electricity? No other comments or concerns from Public Works.

Thank You,

John Zacklene
Public Works Director
Office: 970-686-1218

TOWN PRIDE through Leadership, Service, and Collaboration.

Confidentiality Notice: This electronic transmission and any attached documents or other writings are intended only for the person or entity to which it is addressed and may contain information that is privileged, confidential or otherwise protected from disclosure. If you have received this communication in error, please immediately notify sender by return e-mail and destroy the communication. Any disclosure, copying, distribution or the taking of any action concerning the contents of this communication or any attachments by anyone other than the named recipient is strictly prohibited.

From: Abdul Barzak <abarzak@townofseverance.org>
Sent: Wednesday, January 26, 2022 1:28 PM
Subject: 121 W 2nd Steet - Site Plan (Town of Severance Planning Referral)

Hello,
Please review 121 W 2nd Steet - Site Plan at the link below.
121 W 2ND AVE - SITE PLAN
Please reply to this email by **March 4th**. **PLEASE NOTE: If no response is received, such lack of response shall be considered a "no comment" response.** All comments that are received will be forwarded to the applicant and/or the applicant's representative. Your attention to this review is appreciated.
Please feel free to email or call if you have any questions
Thank you,

From: Jim Gerdeman
To: Abdul Barzak
Subject: RE: 121 W 2nd Steet - Site Plan (Town of Severance Planning Referral)
Date: Wednesday, January 26, 2022 2:16:45 PM
Attachments: image001.png

Hi Abdul,

I was wondering how much additional vehicle traffic this will create for the residential area. Plus will there be enough parking if the owner changes this to office spaces later.

Jim

From: Abdul Barzak <abarzak@townofseverance.org>
Sent: Wednesday, January 26, 2022 1:28 PM
Subject: 121 W 2nd Steet - Site Plan (Town of Severance Planning Referral)

Hello,
Please review 121 W 2nd Steet - Site Plan at the link below.
121 W 2ND AVE - SITE PLAN
Please reply to this email by **March 4th**. **PLEASE NOTE: If no response is received, such lack of response shall be considered a "no comment" response.** All comments that are received will be forwarded to the applicant and/or the applicant's representative. Your attention to this review is appreciated.
Please feel free to email or call if you have any questions
Thank you,

Abdul Barzak
Town Planner
Direct Line: 970-692-1556
Office: 970-686-1218

TOWN PRIDE through Leadership, Service and Collaboration.

Confidentiality Notice: This electronic transmission and any attached documents or other writings are intended only for the person or entity to which it is addressed and may contain information that is privileged, confidential or otherwise protected from disclosure. If you have received this communication in error, please immediately notify sender by return e-mail and destroy the communication. Any disclosure, copying, distribution or the taking of any action concerning the contents of this communication or any attachments by anyone other than the named recipient is strictly prohibited.

From:	Russ Weber
To:	Abdul Barzak
Cc:	Regina Olson; Regina Olson
Subject:	RE: 121 W 2nd Steet - Site Plan (Town of Severance Planning Referral)
Date:	Wednesday, January 26, 2022 1:38:00 PM
Attachments:	image001.png

This would be acceptable for residential at the proposed setbacks (6 foot 9 inches) however would NOT be acceptable for a future commercial occupancy as stated in the submittal.(a Minimum 10 foot setback would be required) On another note, an engineered foundation plan and soils report would be required along with the engineered stamped steel building drawings. Any electrical, plumbing or mechanical would also need submitted if included with this proposal.

Thanks Abdul,

Russ Weber
Regional Operations Manager
3755 Precision Dr, STE 140
Loveland, CO 80538
SAFEbuilt.com
[redacted]

From: Abdul Barzak <abarzak@townofseverance.org>
Sent: Wednesday, January 26, 2022 1:28 PM
Subject: 121 W 2nd Steet - Site Plan (Town of Severance Planning Referral)

Hello,
Please review 121 W 2nd Steet - Site Plan at the link below.
121 W 2ND AVE - SITE PLAN
Please reply to this email by **March 4th**. **PLEASE NOTE: If no response is received, such lack of response shall be considered a "no comment" response.** All comments that are received will be forwarded to the applicant and/or the applicant's representative. Your attention to this review is appreciated.
Please feel free to email or call if you have any questions
Thank you,

From: Sandi Friedrichsen
To: Abdul Barzak
Subject: RE: 121 W 2nd Steet - Site Plan (Town of Severance Planning Referral)
Date: Thursday, January 27, 2022 4:45:56 PM
Attachments: image003.png
image004.png

---

1. If this remains a personal building with no business run out of it we can only give recommendations.
2. If this is or will be ever turned into a commercial business, all of the code requirements of the time will be required because of it being a change of use. These requirements could include, fire sprinklers, fire alarms, additional hydrants, fire extinguishers, addressing requirements, no storage higher than 12 ft tall, and any additional requirements based on the occupancy that will be going into this building. It would be our suggestion to get as much of this installed now as possible, because it will be easier now then when the building is already built. As of right now, a building that is under 5,000 sf would not require a fire sprinkler system unless the fire flows can not be met, but it is unknown what the requirement may be in the future for the sf that requires a fire sprinkler system.
3. Please reach out if you have any further questions on this property.

Sandra Friedrichsen
Fire Marshal
Windsor Severance Fire Rescue
100 7th Street - Windsor, CO 80550
Office Hours Monday - Thursday 0700-1700
Main - (970) 686-2626
Email – [redacted]

**See our Construction & Development Procedures Guide for information on our construction and development requirements. **

From: Abdul Barzak <abarzak@townofseverance.org>
Sent: Wednesday, January 26, 2022 1:28 PM
Subject: 121 W 2nd Steet - Site Plan (Town of Severance Planning Referral)

Hello,
Please review 121 W 2nd Steet - Site Plan at the link below.
121 W 2ND AVE - SITE PLAN
Please reply to this email by **March 4th**. **PLEASE NOTE: If no response is received, such lack of response shall be considered a "no comment" response.** All comments that are received will be forwarded to the applicant and/or the applicant's representative. Your attention to this review is appreciated.
Please feel free to email or call if you have any questions

From: Jason Seybert
To: Abdul Barzak
Subject: Re: 121 W 2nd Steet - Site Plan (Town of Severance Planning Referral)
Date: Tuesday, February 8, 2022 9:54:12 AM
Attachments: image001.png

Abdul -

As this is a commercial project, the district is ok with it to proceed and has no further comment.

Thanks.
Jason

On Wed, Jan 26, 2022 at 1:28 PM Abdul Barzak <abarzak@townofseverance.org> wrote:

> Hello,
>
> Please review 121 W 2nd Steet - Site Plan at the link below.
>
> 121 W 2ND AVE - SITE PLAN
>
> Please reply to this email by **March 4th**. **PLEASE NOTE: If no response is received, such lack of response shall be considered a "no comment" response.** All comments that are received will be forwarded to the applicant and/or the applicant's representative. Your attention to this review is appreciated.
>
> Please feel free to email or call if you have any questions
>
> Thank you,
>
> **Abdul Barzak**
> **Town Planner**
> **Direct Line: 970-692-1556**
> **Office: 970-686-1218**
>
> **TOWN PRIDE through Leadership, Service and Collaboration.**
>
> *Confidentiality Notice: This electronic transmission and any attached documents or other writings are intended only for the person or entity to which it is addressed and may contain information that is privileged, confidential or otherwise protected from disclosure. If you have received this communication in error, please immediately notify sender by return e-mail and destroy the communication. Any disclosure, copying, distribution or the taking of any action concerning the contents of this communication or any attachments by anyone other than the named recipient is strictly prohibited.*

--

Jason Seybert | Chief Operating Officer
[redacted]

Weld RE-4 School District
Facebook • Twitter

From: Kimberly [redacted]
To: Abdul Barzak
Cc: Christine [redacted] ; Carlin [redacted]
Subject: RE: 121 W 2nd Steet - Site Plan (Town of Severance Planning Referral)
Date: Thursday, January 27, 2022 11:19:09 AM
Attachments: image001.png

Good morning, Abdul…

Thank you for including the Town of Windsor in this referral. The subject property is outside of the Town's Growth Management and Community Influence areas. As such, we have no comment.

Have a great day!
Kim

Kimberly [redacted], Assoc. AIA
Planner I
[redacted]

From: Abdul Barzak <abarzak@townofseverance.org>
Sent: Wednesday, January 26, 2022 1:28 PM
Subject: 121 W 2nd Steet - Site Plan (Town of Severance Planning Referral)

Hello,
Please review 121 W 2nd Steet - Site Plan at the link below.
121 W 2ND AVE - SITE PLAN
Please reply to this email by **March 4th**. **PLEASE NOTE: If no response is received, such lack of response shall be considered a "no comment" response.** All comments that are received will be forwarded to the applicant and/or the applicant's representative. Your attention to this review is appreciated.
Please feel free to email or call if you have any questions
Thank you,

Abdul Barzak
Town Planner
Direct Line: 970-692-1556
Office: 970-686-1218

TOWN PRIDE through Leadership, Service and Collaboration.

Confidentiality Notice: This electronic transmission and any attached documents or other writings are intended only for the person or entity to which it is addressed and may contain information that is privileged, confidential or otherwise protected from disclosure. If you have received this communication in error, please immediately notify sender by return e-mail and destroy the communication. Any disclosure, copying, distribution or the taking of any action concerning the contents of this communication or any attachments by anyone other than the named recipient is strictly prohibited.

From: Minas [redacted]
To: Abdul Barzak
Subject: RE: 121 W 2nd Steet - Site Plan (Town of Severance Planning Referral)
Date: Thursday, January 27, 2022 10:44:24 AM
Attachments: image001.png

Abdul,

Thank you for including me with this upcoming project. After looking into it's location, I have determined that it fall outside of my service area.

Have a great rest of your week!

Sincerely,

Minas [redacted]
Poudre Valley Rural Electric Association, Inc.
[redacted]

From: Abdul Barzak <abarzak@townofseverance.org>
Sent: Wednesday, January 26, 2022 1:28 PM
Subject: 121 W 2nd Steet - Site Plan (Town of Severance Planning Referral)

CAUTION: This email originated from outside of the organization. Do not click links or open attachments unless you recognize the sender and know the content is safe.

Hello,
Please review 121 W 2nd Steet - Site Plan at the link below.
121 W 2ND AVE - SITE PLAN
Please reply to this email by **March 4th**. **PLEASE NOTE: If no response is received, such lack of response shall be considered a "no comment" response.** All comments that are received will be forwarded to the applicant and/or the applicant's representative. Your attention to this review is appreciated.
Please feel free to email or call if you have any questions
Thank you,

From: David M Rau
To: Abdul Barzak
Subject: RE: 121 W 2nd Steet - Site Plan (Town of Severance Planning Referral)
Date: Thursday, January 27, 2022 12:10:06 PM
Attachments: image004.png

Thanks. No comments here.

Cheers, *Dave.*

David M. Rau, P.E., BCEE
Principal Engineer
Paragon Consulting Group, Inc.
[redacted]
www.paragoncg.com

PARAGON
CONSULTING GROUP

The information contained in this message may be privileged and confidential and protected from disclosure. If the reader of this message is not the intended recipient, or an employee or agent responsible for delivering this message to the intended recipient, you are hereby notified that any dissemination, distribution or copying of this communication is strictly prohibited. If you have received this communication in error, please notify us immediately by replying to the message and deleting it from your computer.

From: Abdul Barzak <abarzak@townofseverance.org>
Sent: Wednesday, January 26, 2022 1:28 PM
Subject: 121 W 2nd Steet - Site Plan (Town of Severance Planning Referral)

Hello,
Please review 121 W 2nd Steet - Site Plan at the link below.
121 W 2ND AVE - SITE PLAN
Please reply to this email by **March 4th**. **PLEASE NOTE: If no response is received, such lack of response shall be considered a "no comment" response.** All comments that are received will be forwarded to the applicant and/or the applicant's representative. Your attention to this review is appreciated.
Please feel free to email or call if you have any questions
Thank you,

AGENDA ITEM SUMMARY

AGENDA ITEM	SUBMITTED BY	PRESENTED BY
Multi-Family Requirements: Land Use Code	Abdul Barzak, Town Planner	Abdul Barzak, Town Planner

ACTION REQUESTED

Community Development and Management ask that the Planning Commission review, discuss, and forward a recommendation to the Town Council on the Multi-Family Requirements. Actions that may be taken:

1. Forward a recommendation of approval to the Town Council for Land Use Code changes regarding Multi-Family Requirements.
2. Take No Action.

Report
Action Requested

BRIEF SUMMARY

On May 5th, 2022 and June 1st, 2022 the Land Use Advisory Committee (LUAC) reviewed, discussed, and directed Town staff with recommendations for Multi-Family Requirements within the Land Use Code. Tonight those recommendations come before the Planning Commission. Town staff asks that the Planning Commission review, discuss, and forward a recommendation to the Town Council for Multi-Family Requirements.

PUBLIC SUPPORT/CONCERN

Residents have expressed the desire to increase Multi-Family requirements to Town staff.

ANALYSIS AND RECOMMENDATION

Town staff is asking for the Planning Commission to review, discuss, and forward a recommendation of approval to the Town Council for Land Use Code changes regarding Multi-Family Requirements.

MATERIALS SUBMITTED

The following materials were submitted and included in this packet:

1. Multifamily Design Criteria

Multifamily Design Criteria

CODE REVIEW (MASSING & SCALE)					
Communities	**Code Language**	**LUAC**	**Planning Commission**	**Town Council**	**Staff Analysis**
Severance	Town Core: - Varied setbacks are encouraged to create interest along streetscapes - Buildings on the south side of the road are encouraged to be set back from the ROW to reduce shading	Town Core: - Support a 0' setback - Use 75% language from Windsor - Focus on preserving the character of the community (agricultural heritage) - Support up to 3-stories with a rooftop amenity feature (accessible elements allowed to extend above height - i.e. elevator shaft, etc.) - Height and shadow study should be a part of reviewing/approving 3 story structures - First Floor to be reserved for Commercial uses - Rooftops are encouraged as open space, passive or active; safety concerns with falling from upper level without adequate safety mechanisms Suburban Perimeter: - Support a base of 2-stories, with 3-stories being incorporated to support height variations - 3-story consideration needs to be part of overall useable living space (functional %) - Should incorporate examples of appropriate design to avoid box-like structures Nodes: - Example of BelMar Shopping Center - These are the areas for higher density and activity with appropriate transitions to adjacent uses (i.e. step downs near suburban perimeter areas) - Incorporate language and elements from the Comp Plan and Corridor Plans			Town Core: - Could consider requiring first floor commercial along corridors and up to a certain percentage of an overall development. Requiring all first floors within Town Core to be commercial could be a challenge when incorporating mixed-use projects or create interpretation challenges with lobbys and first floor amenity areas to potential residential projects.
Evans					
Firestone	- Maximum length of MF building = 160' - Lengths exceeding 160' may be considered w/ greater articulation, variety in massing, and enhanced detail and where contextual design is incorporated including the type and scale of adjacent uses or such buildings are located internal to the development - Perimeter of the development and adjacent to streets, parks, open space, trails, or lower density residential, buildings shall step down consistent with the context of the adjacent feature or use				
Frederick					
Johnstown	- Should not exceed 3-stories in or near the older portions of Town - Should vary in orientation relative to the street				
Timnath	- Shall be of compatible scale adjacent to SF residential structures - Primarily oriented parallel to the streets they face - Main entrances shall be visible to create continuous streetscapes - Maximum unbroken facade plane = 50' - Plane shall be interrupted by projections, recesses, portals, courtyards, plazas, or other appropriate architectural design - Minimum depth of plane breaks = 2’				
Wellington					
Windsor	Within the Commercial Corridor Area: - Features such as windows, entrances, arcades, porches, pilasters, arbors, awnings, recessed or projecting windows must occur on 75% of façade - No blank wall greater than 50' in length adjacent to a public street or walkway - Smaller and lower building masses when adjacent to residential areas				

Multifamily Design Criteria

CODE REVIEW (BUILDING MATERIALS)					
Communities	**Code Language**	**LUAC**	**Planning Commission**	**Town Council**	**Staff Analysis**
Severance	- Reflective of the regional character of urban buildings is encouraged - Including red or tan brick, sandstone, awnings, etc.	- Expand on existing Severance language to include language from Firestone and Frederick			- Consider incorporating minimum percent requirements to encourage diversity in materials - Could also establish a transparency requirement based on context to ensure adequate windows, particularly in Town Core and Nodes
Evans	- All sides shall include a combination of durable materials such as stucco, brick, stone; colored and textured concrete and decorative masonry block; glass or acrylic block; vinyl, concrete or wood siding; and hardwood and pressure-treated wood				
Firestone	- Primary exterior building and roofing materials shall be constructed from durable materials with product warranties or an industry expected life of a minimum of twenty-five (25) years - Vinyl siding and EIFS = not be permitted				
Frederick	- Should be of a high quality, as approved by the Town - Suggested exterior materials include natural wood, stucco, brick, and stone - Due to the imposing nature of many MF buildings, the exterior materials should reflect subdued colors and muted tones				
Johnstown	- Design and quality materials should be empoyed on all sides, while emphasizing the public street image - Regional materials such as timber and stone provide texture and richness to residential and should be liberally used - Masonry, including stone and brick should be provided for the entire first floor or 40% of the overall wall surface, whichever is greater				
Timnath	- Shall suit the architectural style of a building and be consistent or complementary throughout - Shall be brick, cementitious stucco, stone, vertical board and batten, wood or cementitious siding and approved architectural concrete masonry unit (metal siding is allowed in industrial district only) - Dryvit, smooth face concrete block, or EFIS may only be used in banding, decorator strips, cornice lines and wall capping				
Wellington					
Windsor	Within the Commercial Corridor Plan Area: - Variety of materials w/ brick encouraged as major material; stone; stucco or EIFS less than 50% of façade				

Multifamily Design Criteria

CODE REVIEW (ARCHITECTURAL VARIETY)					
Communities	**Code Language**	**LUAC**	**Planning Commission**	**Town Council**	**Staff Analysis**
Severance	- Varied building heights, styles, colors and building details are encouraged	- Expand existing language to include Firestone and Frederick language			
Evans					
Firestone	- Shall incorporate a variety of distinct building designs according to the scale of the development: One model for every four buildings minimum - Models shall be evenly utilized to the maximum extent practicable - Two distinct building designs, as required above, shall be easily distinguished through a minimum of two of the following: 1) A variation in length of 30% or more; 2) A variation in the footprint of the building of 30% or more; 3) A distinct variation in use of materials; 4) A variation in the type of dwelling unit contained in the building that results in a significantly different scale and mass, i.e., apartments vs. townhomes or duplexes; or 4) A distinct variation in building height and roof form				
Frederick	- For developments of 3 or more MF stacked buildings, a floor plan may be repeated; however, identical building facades must not be replicated more than twice within the development				
Johnstown					
Timnath					
Wellington					
Windsor					

Multifamily Design Criteria

CODE REVIEW (ARCHITECTURAL DETAIL)					
Communities	**Code Language**	**LUAC**	**Planning Commission**	**Town Council**	**Staff Analysis**
Severance		- Incorporate Frederick and Firestone language			- Suggest expanding on the Firestone and Frederick language to clearly identify the architectural features and establish a minimum of at least 3-4 that must be incorporated, rather than 2 - Building articulation should be established at a minimum of 3-4', as many builders will incorporate 1' or less and consider that articulation - balconies should also be encouraged to articulate from the buidling, otherwise you end up with juliet style balconies that are even with the building plane - Dormers or other roof elements, could be part of Roof Form requirements, rather than an architectural detail here
Evans	- Elevations shall be broken up through the use of decorative architectural features such as a change in plane; molding, columns, cornice or arches; rigid awnings or canopies; color and texture variations; recessed windows or doors, bay windows, windowsills or window boxes; decks and covered patios; or exposed structural elements like steel or timber beams				
Firestone	- Blocky, uniform facades are prohibited - Facades shall be articulated through the incorporation of 2 or more of the following: 1) Balconies; 2) Bay or box windows; 3) Insets or other relief in the wall plane; 4) Porches; 5) Dormers; 6) Variations in materials; or 7) Variations in roof forms				
Frederick	- Each building shall feature walls that are articulated by at least 2 of any of the following elements within every 36' length of the facade: 1) Recesses, projections or significant offsets in the wall plane; 2) Distinct, individualized, and covered entrances; 3) Chimneys that project from the wall plane; 4) Balconies and/or other outdoor living space; or 4) bay or box windows				
Johnstown	- Buildings adjacent to SF neighborhoods are encouraged to adapt the architectural features of SF-detached residential, to achieve a “large house” appearance - Side street entires, reduced upper floors, variable wall planes, and covered porches/entries help achieve the large house look				
Timnath	- Walls that can be seen from Public street shall be treated as a primary building façade				
Wellington					
Windsor	Within the Commercial Corridor Plan Area: - Features such as windows, entrances, arcades, porches, pilasters, arbors, awnings, recessed or projecting windows must occur on 75% of façade				

Multifamily Design Criteria

CODE REVIEW (COLORS)					
Communities	**Code Language**	**LUAC**	**Planning Commission**	**Town Council**	**Staff Analysis**
Severance	- Varied building colors are encouraged	- Support expanding existing language to include Evans and Frederick details - Support Town Manager guidance on trim and accent allowance			- Carefully consider how roof color impacts the overall built and natural enviornments - May consider not dictating roof color to be dark
Evans	- Compatible with character of the surrounding area - Reflective, neon, primary and secondary colors shall not be permitted as exterior paint colors on any structure within a MF development, except for trim and accent by approval of the Community Development Director - Acceptable colors include subtle warm and cool colors, earth-tone colors and neutral colors				
Firestone					
Frederick	- Sudued colors and muted tones - Roof material colors should be darker and warm, earth-toned hues that accent and complement other building colors				
Johnstown					
Timnath					
Wellington					
Windsor	Within the Commercial Corridor Plan Area: - Earth tone w/ low reflectance as primary color				

Multifamily Design Criteria

CODE REVIEW (ROOF FORMS)					
Communities	**Code Language**	**LUAC**	**Planning Commission**	**Town Council**	**Staff Analysis**
Severance		- Support Frederick language - Encourage solar on carport structures, if utilized in development. - Look at solar code language in the future			- Frederick language could be expanded on to include additional roof elements and establishing at least 2 shall be included, rather than at least 1 - Consider roof materials and what the Town is comfortable allowing. Metal can be used elequently as an accent material (copper style roof features) that breaks up larger roof forms. Some communities require asphalt shingles, which limits options for a more sustainable roof, such as concrete and metal. Specifics for metal should be clear, using images and quality guidance. - Solar language could be part of sustainable regulations or guidelines that the Town could consider adopting to include other topic areas, in addition to solar. Could also require EV charging at a certain ratio of required parking - Could require large MF projects (based on unit counts) provide carport structures at a certain ratio that is open parking (not an additional fee)
Evans	- Gable, gambrel, hipped or otherwise broken up through varying planes - Ridgelines no longer than 25' in any one direction and have two changes of elevations of at least 1'; contains four or more gables facing the front property line: including “false” or nonstructural gables; chipped gable ends of at least 2 triangular areas with a slope of at least 4:12 and where the ridgelines terminate at least 2' in from the exterior plane				
Firestone	- A variety of roof forms is strongly encouraged - Shall incorporate roof pitches of between 3:12 and 12:12; however, alternative roof forms may be permitted at the discretion of the Director - Roof overhangs shall be a minimum of 12" to establish strong shadow lines and complement the pitch and architectural style of the structure				
Frederick	- Shall feature a combination of primary and secondary roofs - Primary pitched roofs shall be articulated by at least 1 of the following elements: 1) Changes in plane and elevations; 2) Dormers, gables or clerestories; or 3) Transitions to secondary roofs over entrances, garages, porches or bay windows				
Johnstown	- Sloped roofs and varied roof height				

Multifamily Design Criteria

CODE REVIEW (ROOF FORMS)					
Communities	**Code Language**	**LUAC**	**Planning Commission**	**Town Council**	**Staff Analysis**
Severance		- Support Frederick languag - Encourage solar on carport structures if utilized in development. - Look at solar code language in th future			- Frederick language could be expande on to include additional roof elements and establishing at least 2 shall be included, rather than at least 1 - Consider roof materials and what th Town is comfortable allowing. Metal can be used elequently as an accent material (copper style roof features) that breaks up larger roof forms. Some communities require asphalt shingles, which limits options for a more sustainable roof, such as concrete and metal. Specifics for metal should be clear, using images and quality guidance. - Solar language could be part o sustainable regulations or guidelines that the Town could consider adopting to include other topic areas, in addition to solar. Could also require EV charging at a certain ratio of required parking - Could require large MF projects (base on unit counts) provide carport structures at a certain ratio that is open parking (not an additional fee)
Timnath	- Shall be appropriate to the architectural style of a building - Where exposed to public view, roof material shall be selected from enameled standing seam metal, concrete or clay tiles, copper metal, or wood textured (architectural grade) or composition asphalt shingles - The use of plastic, fiberglass, other metal, or glass visible to public view is prohibited				
Wellington					
Windsor	Within the Commercial Corridor Plan Area: - Minimum 3:12 pitch				

Multifamily Design Criteria

CODE REVIEW (OPEN SPACE)					
Communities	**Code Language**	**LUAC**	**Planning Commission**	**Town Council**	**Staff Analysis**
Severance	- Plazas and outdoor gathering spaces, outdoor dining, patios, etc. are encouraged - Shall provide: A minimum 25% of the gross land being subdivided as functional open space as defined in Section16.12.240, with the following break down related to usable and non-usable: 1) 10% to 20% of the open space must be passive such as detention, trails, parkways, and conservation areas, etc.; 2) 5% to 10% of the open space must be active open space such as turf activity areas, playgrounds, pavilions, etc.; 3) Pocket parks are not allowed as park improvement unless granted by the Board of Trustees - A minimum of 1 centrally located park: location and extent of park will be determined through platting process and approved by the Board of Trustees on a case-by-case basis - Land for 1 community park or a fair-share, cash-in-lieu contribution for the park that will serve the development - An internal trail system and trails design	- Support existing criteria and suggest changing the cash-in-lieu criteria to be market value versus fair-share value - Access to parks and overall accessibility should be expanded on and required - Favor larger percentage of active open space, versus large areas of passive active space - Maintenance needs to be carefully accounted for			- Agree market value is the way to go - Suggest modifying the language that notes trails as passive open space as these are active amenities - In addition, detention areas can and should be designed to be useable or natural areas, rather than a grass bowl with a concrete pan. Some communities allow these to be underground facilities, that allow a park or other amenity to be placed over the top - based on grading and existing detention facilities - Suggest increasing the 5-10% acive open space criteria. Includes establishing criteria for park types/features and size of open play areas; it is not unreasonable to see some active open space requirements in the 30-40% range, depending on if sidewalks and patios are considered in the equation.
Evans					
Firestone					
Frederick	- Shall provide: (a) A minimum of 25% of the gross land being subdivided as functional open space which may include: pocket parks, plazas, trails, recreational amenities, HOA-owned or landowner-owned landscaped areas (excluding roads, drives, and parking lots), natural areas and amenities for residents or other civic purposes; (b) 1 centrally located pocket park for every 200 units; (c) The land for 1 neighborhood park within a 1/4-mile radius of the proposed homes; or a fair-share, cash-in-lieu contribution for the neighborhood park that will serve the development				
Johnstown	- Minimum livability open space per dwelling unit is 900 sqft - In PUD areas, at least 30% of the site is to be in open area, including landscaped buffers and amenities, while 10% of the site is to be in park and recreation use (Town Design Guidelines)				

Multifamily Design Criteria

CODE REVIEW (OPEN SPACE)					
Communities	**Code Language**	**LUAC**	**Planning Commission**	**Town Council**	**Staff Analysis**
Severance	- Plazas and outdoor gathering spaces, outdoor dining, patios, etc. are encouraged - Shall provide: A minimum 25% of the gross land being subdivided as functional open space as defined in Section16.12.240, with the following break down related to usable and non-usable: 1) 10% to 20% of the open space must be passive such as detention, trails, parkways, and conservation areas, etc.; 2) 5% to 10% of the open space must be active open space such as turf activity areas, playgrounds, pavilions, etc.; 3) Pocket parks are not allowed as park improvement unless granted by the Board of Trustees - A minimum of 1 centrally located park: location and extent of park will be determined through platting process and approved by the Board of Trustees on a case-by-case basis - Land for 1 community park or a fair-share, cash-in-lieu contribution for the park that will serve the development - An internal trail system and trails design	- Support existing criteria and suggest changing the cash-in-lieu criteria to be market value versus fair-share value - Access to parks and overall accessibility should be expanded on and required - Favor larger percentage of active open space, versus large areas of passive active space - Maintenance needs to be carefully accounted for			- Agree market value is the wa to go - Suggest modif ing the language that notes trails as passive open space as these are active amenities - In addition, detention areas ca and should be designed to be useable or natural areas, rather than a grass bowl with a concrete pan. Some communities allow these to be underground facilities, that allow a park or other amenity to be placed over the top - based on grading and existing detention facilities - Suggest increasing the 5-10 acive open space criteria. Includes establishing criteria for park types/features and size of open play areas; it is not unreasonable to see some active open space requirements in the 30-40% range, depending on if sidewalks and patios are considered in the equation.
Timnath	- Minimum 25% of the gross land being subdivided for use as open space, with 50% of that being USABLE OPEN SPACE - Pocket parks of at least 0.5 acres for every 100 Dwelling Units or portion thereof which shall be constructed in the subdivision and maintained by the HOA or special district; see the definition of Usable Open Space for allowed uses - An internal trail system connecting throughout the development, and trails as designed in the Town Parks, Recreation, Open Space and Trails Plan				
Wellington	- Shall include at a minimum: a. 25% of the gross land being subdivided as functional open space, which may include pocket parks, plazas, trails, recreational amenities, HOA or landowner owned landscaped areas (excluding parking lots), natural areas and amenities for residents or other civic purposes; b. 1 centrally located pocket park for every 200 residential units; c. The land for 1 neighborhood park within ¼ mile radius of the proposed homes or a fair-share, cash-in-lieu contribution for the neighborhood park that will serve the development; and d. An internal trail system, taking into account trails designated in the Comprehensive Plan and the Park Plan				
Windsor	- 20% of Site				

Multifamily Design Criteria

CODE REVIEW (LANDSCAPING)					
Communities	**Code Language**	**LUAC**	**Planning Commission**	**Town Council**	**Staff Analysis**
Severance		- Support Wellington language, but remove buffer language of #4 - address in buffering language and make this context sensitive			
Evans	- 1 tree and 5 shrubs for every 3,000 sqft - No more than 25% of the required number of trees shall be ornamental - Structures containing more than 4 units shall have foundation plantings containing an average of 1 shrub for every 5' - All land not within the bldg. footprint or otherwise overlain by impervious surface or gravel shall be landscaped with shrubs, sod, or other groundcover				
Firestone	- A minimum of 15% of the entire lot with landscaping of live plant materials - Install trees on-site, a minimum of 1 tree per 1,000 sqft of landscaped area, distributed on the site - Install a minimum of 1 shrub per 150 sqft of landscaped area - Shrubs shall be distributed into groupings throughout the site and located within planting beds - Trees may be substituted for up to 1/2 of the required shrubs at the rate of 1 tree for 10 shrubs and vice-versa, subject to Town approval - Install groundcover - xeriscape landscaping is encouraged - Native grass shall be weed-free and maintained at an appropriate height according to species - Use of irrigated turf is discouraged unless installed within a non-potable irrigation system and shall be minimized to the maximum extent reasonably practicable. ** Water-efficient irrigation system for all landscaped areas is required and connection to a nonpotable water source if available				
Frederick	- Minimum of 20% of the site shall be maintained as landscaped area - Minimum of 75% live materials between the front of the dwelling or structure and the curb unless approved by the Town - No less than 40% of the required landscaped area shall be maintained as drought tolerant turf grass, unless otherwise approved by the Town - No less than an additional 25% of landscaped area shall be covered in other live plant materials such as ground cover, shrubs, ornamental grass, etc. - Minimum of 2 trees and 4 shrubs per 1,000 sqft of landscaped area, distributed on the site - 1 tree may be substituted for 4 shrubs, or vice-versa provided the development meets screening, buffering, and other landscape requirements of the Code				

Multifamily Design Criteria

CODE REVIEW (LANDSCAPING)					
Communities	**Code Language**	**LUAC**	**Planning Commission**	**Town Council**	**Staff Analysis**
Severance		- Support Wellington language, bu remove buffer language of #4 - address in buffering language and make this context sensitive			
Johnstown	- Entry features should be used to highlight access to the development and provide a point of interest along the street - Strong perimeter landscaping is encouraged - Extensive landscaping of common open space areas and parking is encouraged - Provision of amenities is encouraged to maintain the residential character of the development - Common open space areas will have irrigated live ground cover over at least 75% of the area - Common open space shall be landscaped at a ratio of at least 1 tree and 5 shrubs for every 4,500 sqft of landscaped area - Up to 30% of the required shrubs may be substituted by trees at the rate of 1 tree for 10 shrubs - At least 50% of the trees will be overstory/shade deciduous species and 25% of the trees will be coniferous species, where appropriate				
Timnath	- Landscaped areas shall be covered with grass or other types of live or organic ground cover - Planting and irrigation shall be established prior to issuance of a CO				
Wellington	- In addition to ROW, shall provide: 1) Site trees - subject to water conservation practices, a minimum of 1 tree / 1,000 sqft of landscaped area 2) Shrubs - minimum of 1 shrub / 150 sqft of landscaped area: Shall be grouped and distributed throughout the site; With the Board of Trustees' approval, trees may be substituted for up to ½ of the required shrubs at the rate of 1 tree for 10 shrubs 3) Ground cover - irrigated turf maintained to appropriate standards for active recreation in areas. Where appropriate,native grass for areas that will not function as active recreation areas. Native grass must be weed-free and maintained at a maximum height of 8". Shall be a minimum of 75% live materials between the front of the house and the curb unless approved by the Board 4) Landscape setback to parking lots 30' from arterials or 25' from other streets. Setback provides a buffer between street parking areas. May be reduced to 15' if used in combination with a 3-4' masonry or stone decorative wall. Signage may be included				
Windsor					

Multifamily Design Criteria

CODE REVIEW (STREETSCAPE)					
Communities	**Code Language**	**LUAC**	**Planning Commission**	**Town Council**	**Staff Analysis**
Severance	- Perimeter treatment adjacent to roadways should include a landscape buffer of varying width with a minimum width of 20' - A meandering community pathway a minimum of 10' wide shall be located within the buffer - The use of shade trees is encouraged along greenbelt community pathways	- Support Timnath language being incorporated w/ existing code requirements			- streetscape design should also take into account context and utilize the recently adopted corridor plans for context and guidance
Evans	- 1 shade tree / 35' of street frontage shall be installed in the ROW or within 10' of the ROW				
Firestone	- 1 deciduous or ornamental street tree for every 40' of street frontage or portion thereof, with a minimum of 2 trees per lot for lots that have a minimum width of 60' - Street trees shall be planted within the tree lawn portion of the ROW with adequate spacing to allow for the mature spread of the trees - When a tree lawn is not provided, trees shall be planted within 10' of the back of curb				
Frederick	- 1 tree for every 40' of road frontage or curb - Arterial, Collector and local streets: shall install tree lawns with live groundcover, including a combination of grass, flowers, street trees, and mulch (Arterial Only): and planter beds, ornamental structures, paving and 1 shrub for every 150 sqft of landscape area clustered into planting beds				
Johnstown	- ROW will be landscaped at a ratio of at least 1 tree and 5 shrubs for every 1,000 sqft of landscaped area - For narrow landscaped areas, at least 1 tree for every 50' of ROW shall be required - At least 75% of the trees will be overstory/shade deciduous species and 25% of the trees will be coniferous species, where appropriate - Evergreen trees must be placed a minimum of 10' off the southern edge of bikepath or curb to minimize shading and icing concerns where possible - Trees will be placed to create a street tree canopy that provides an aesthetic gateway along arterial streets, and functions to cool street pavement - Trees will be planted primarily between the curb and the bikepath when the bikepath is detached from the curb, and unless not appropriate due to utilities, highway restrictions or other physical constraints - Shrubs may be used to buffer on-site areas and to provide pedestrian separation between the bikepath and the street - Irrigated grass will be the primary ground cover except for shrub bed areas				

Multifamily Design Criteria

CODE REVIEW (STREETSCAPE)					
Communities	**Code Language**	**LUAC**	**Planning Commission**	**Town Council**	**Staff Analysis**
Severance	- Perimeter treatment adjacent to roadways should include a landscape buffer of varying width with a minimum width of 20' - A meandering community pathway a minimum of 10' wide shall be located within the buffer - The use of shade trees is encouraged along greenbelt community pathways	- Support Timnath language being incorporated w/ existing code requirements			- streetscape design should also take into account context and utilize the recently adopted corridor plans for context and guidance
Timnath	- A green space, or pedestrian area, at least 6' in width shall be provided parallel to the street - A green strip 10' in width shall be planted with at least 1-large, deciduous tree per 35' of frontage				
Wellington	Street Trees: 1 deciduous or ornamental tree for every 40' of block frontage or portion thereof - Street trees shall be planted within the tree lawn portion of the ROW with spacing to allow for the mature spread of the trees Collector streets: shall be landscaped with live ground cover, including a combination of grass, trees, flowers, grass or shrubs - In commercial areas, particularly in the downtown district, collector streets may be paved in areas which function as pedestrian access to storefronts and which are integrated into the overall design of the other improvements on the site Arterial streets: shall be landscaped with live ground cover as appropriate to the use and function of the area, including a combination of grass, trees, flowers, paving and 1 shrub / 150 sqft of landscape area clustered into planting beds - New development shall install an automatic irrigation system for all landscaping within arterial ROW				
Windsor	- 1 street tree / 40'				

Multifamily Design Criteria

CODE REVIEW (PEDESTRIAN CONNECTIONS)					
Communities	**Code Language**	**LUAC**	**Planning Commission**	**Town Council**	**Staff Analysis**
Severance	- Pedestrian connectivity within and to adjacent development is required - Off-street pedestrian linkage can be accomplished by the use of open greenway/corridors with meandering trails or paths - Pedestrian walks and spaces shall be provided as necessary to ensure that projects are easily navigated and enjoyable for the pedestrian	- Support expanding the existing language by including Frederick language and amenities along connections - Support staff's recommendation of requiring a pedestrian connection exhibit, showing internal trail and sidewalk networks tying into the surroudning system; and how these tie into the regional trail system; also must clearly identify how pedestrians are safely crossing the roadways			- Using the exhibit approach will also help identify off-site improvements that may need to be made by a developer to build out pedestrian connections, similar to roadway systems. Will also help identify crosswalk improvements that may need to be part of the development
Evans					
Firestone	- Walkways required for internal circulation - All sidewalks shall be detached and separated by a tree lawn that is a minimum of 8' in width except where adjacent to parking				
Frederick	- A pedestrian network that interconnects all dwelling units and uses, and common open space shall be provided throughout each development - Network is made up of sidewalks, walkways, multi-use pathways, and trails - Sidewalks shall be separate and distinct from motor vehicle circulation to the greatest extent possible - Pedestrian circulation system shall include gathering/sitting areas and provide benches, landscaping, and other street furniture where appropriate				
Johnstown	- The public side should provide for landscaped front yard with walkway connections to public sidewalk				
Timnath	- Sidewalks shall be provided along all public streets on the entire frontage of a development site and align with existing sidewalks on adjacent properties including both frontages on corner lots - Minimum width is 5' - Additional width may be required as determined on Site Development Review				
Wellington					
Windsor					

Multifamily Design Criteria

CODE REVIEW (WATER CONSERVATION)					
Communities	**Code Language**	**LUAC**	**Planning Commission**	**Town Council**	**Staff Analysis**
Severance		- Support Windsor's language - Need to clearly identify what the low water plant material is based on and reference the list maintained by separate entity - Look at artificial turf options in active open space areas and limit to play area, play equipment, etc. Do not want the entire oepn space area to be artificial turf			- If artificial turf is incorporated as an option or encouraged, consider shading as turf can absorb heat and become warm to the touch, especially here in Colorado with dry air and warm temps.
Evans					
Firestone					
Frederick	- Landscaping plans shall be designed to incorporate water conservation materials and techniques through application of Xeriscape landscaping principles - Xeriscape landscaping principles do not include or allow artificial turf or plants, mulched (including gravel) beds or areas without landscape plant material, paving of areas not required for walkways, plazas or parking lots, bare ground, weed covered or infested surfaces or any landscaping that does not comply with the standards of this Section of the Code				
Johnstown	- Landscaping will be designed to conserve water and other limited resources, and to protect environmentally sensitive areas - Xeriscape designs (water-efficient landscape and irrigation techniques) are encouraged for all projects - All Town projects are required to incorporate xeriscape standards - The use of non-potable water for landscape irrigation shall be required where feasible				
Timnath	- Landscapes shall use the following xeriscape design principles to facilitate water conservation: 1) Appropriate turf selection to minimize the use of bluegrass, use of mulch to maintain soil moisture and reduce evaporation, zoning of plant materials according to their microclimatic needs and water requirements, and improvement of the soil with organic matter if needed; and 2) Well-planned planting schemes that include an efficient irrigation system, proper maintenance and an appropriate watering schedule				
Wellington					

Multifamily Design Criteria

CODE REVIEW (WATER CONSERVATION)					
Communities	**Code Language**	**LUAC**	**Planning Commission**	**Town Council**	**Staff Analysis**
Severance		- Support Windsor's languag - Need to clearly identify what the lo water plant material is based on and reference the list maintained by separate entity - Look at artificial turf options in activ open space areas and limit to play area, play equipment, etc. Do not want the entire oepn space area to be artificial turf			- If artificial turf is incorporated as a option or encouraged, consider shading as turf can absorb heat and become warm to the touch, especially here in Colorado with dry air and warm temps.
Windsor	- A minimum of 65% of the shrubs shall be classified as very low or low water use - No more than 15% of shrubs or trees shall be classified as high water use - Sites over 3 acres shall be organized into distinct hydrozones according to their microclimatic needs and water requirements - Plants with similar water requirements shall be grouped together in the same irrigation zones - Grass turf areas classified as medium or high water use shall be limited to high use or high visibility areas - Grass varieties listed as low water use may be used without limitation				

Multifamily Design Criteria

CODE REVIEW (AMENITIES)					
Communities	**Code Language**	**LUAC**	**Planning Commission**	**Town Council**	**Staff Analysis**
Severance	- Seating, outdoor dining, trash receptacles, bike racks for public use and other such features shall be required	- Support adding in Johnstown language, but removing the word 'large' from the last bullet and requiring these amenities for all developments			- Suggest incorporating a minimum threshold for the amenities, such as minimum playground amenities or requirement to be for all ages, common plazas is open ended - Consider a tiered points system based on development size (number of units). - For example: -- Seasonal Planing areas, flowering trees = 1 point -- Community gardens, seating walls = 2 points -- Play structures, gazebos = 3 points -- Pool, clubhouse, rec center = 5 points
Evans	- Sites larger than 15 acres = common areas shall contain at least 3 of the following features: 1) seasonal planting areas; 2) large, flowering trees; 3) community garden; 4) seating; 5) pedestrian-scaled lighting; 6) gazebos or other decorative structures; 7) play structures for children ages 5 to 12; or 8) natural environmental features				
Firestone					
Frederick					
Johnstown	- Should be appropriate to the anticipated occupants and at the minimum include: common plazas and parks, playgrounds and paths - Large developments should provide clubhouses and recreation facilities such as fitness centers				
Timnath					
Wellington					
Windsor					

June Community Development & Engineering Report

Abdul Barzak, Town Planner
Chris Messersmith, Colorado Civil Group, Inc. (CCG)
Shar Shadowen, CCG
June 6, 2022

Planning Projects/Documents

Land Use Code Updates

At the direction of Council, Town staff will be bring all Land Use Code items through the Land Use Advisory Committee, Planning Commission and finally to Town Council for a comprehensive look at all items. Town Council will begin reviewing items starting in July.

MPO

- Technical Advisory Committee (TAC) – TAC will be continuing a discussion on the FY2023 Unified Work Plan (UPWP) and the FY2023-2026 Transportation Improvement Program (TIP). Additionally TAC will begin discussion on the 2050 RTP Regionally Significant Corridors (RSCs) Update. The MMOF Call for projects is open.
- NoCo Bike & Ped Collaborative – Looking at implementing a regional "Shift your Ride" campaign/challenge to bring awareness and encourage bike & pedestrian use to be rolled out in late 2022 or 2023. NoCo is also coordinating with TAC for MMOF Call for Projects and working to distribute recently passed House Bills regarding multimodal option.
- Weld County Mobility Committee (WCMC) – Working closely with the Larimer County Mobility Committee to further develop and fine-tune "Ride NoCo" formerly the One Call/One Click Center to be a central hub for transportation options in Northern Colorado

Capital Improvement Projects

SH 392 – WCR 23 Intersection Improvements

Town staff has obtained current traffic counts for this intersection. Proposals from the design consultants have been submitted, staff has reviewed and interviewed and will bring forth a recommendation to the Town Council at the June 14th meeting.

E Harmony Road – WCR 19 Intersection Improvements

Drexel, Barrell & Co. (DBC) has started on the preliminary design tasks for this project. DBC has obtained current traffic counts. DBC will complete the utility locates, topographic survey, and geotechnical engineering analysis. DBC is currently working on the intersection control analysis (ICA). The ICA will evaluate a traffic signal and roundabout

configuration. The results of the ICA will be presented to the Town Council at the June 14th meeting for consideration prior to DBC starting the design of the intersection improvements.

CDOT TAP/MMOF Trail Project

All comments from CDOT have been addressed by CCG and Town staff. The project will be advertised for construction bids in the next 4 – 6 weeks, approximately. Construction is anticipated to start in August or September 2022.

Community Park Phases 2 & 3

The temporary water service for the CXT restroom is to be provided by the NWCWD. This temporary water service is a provision in the NWCWD Amended and Restated Water Service Agreement which is currently being reviewed by Town staff. The playground has been finished and celebrated it ribbon cutting on June 10th.

Water System Upgrades

Currently CCG is working with Town staff and the NWCWD to balance (hydraulic) MM-2 with the at-grade water tanks and booster pump station. The goal is for MM-2 to be the primary water supply for the Town and the booster pump station providing the redundant (secondary) supply. CCG is working with the NWCWD, Town staff, Pipestone Equipment, LLC and Timber Line Electric & Control Corporation to monitor and control the Master Meters and booster pump station.

Secondary Water Connection/Supply

Town Staff has an upcoming meeting with the City of Greeley to discuss a potential water system connection (i.e. emergency connection). CCG will provide an exhibit showing two possible water line routes to provide this secondary connection.

NWCWD Amended and Restated Water Service Agreement

CCG is working with Town Management and the Town Attorney on the NWCWD Agreement. The Agreement will need to include the Severance Community Park Restroom Water Service, Master Meter No. 1 and No. 2 operating parameters, Emergency Connection operating parameters, SCADA agreement to access NWCWD Master Meter data, and ASPIT future acquisition projections, plus additional provisions.

Elevated Water Tank

CCG has completed the preliminary design for the elevated water tank. Town management has made progress negotiating with the property owner regarding the property and temporary construction easement acquisitions. CCG is projecting future water storage requirements based on the full build out of the Town of Severance's existing water service area.

DEVELOPMENT REVIEW UPDATES

The list below is all of the currently active submitted projects to the Town Council. If you have questions on these please contact me for more information.

- **Severance South** (Entire section north of 392 between 21 and 23) – Applicant is routing mylars for signatures.

- **Franklin's Place/Tailholt 3rd Filing Preliminary Plat** (Southwest corner of E. Harmony Road and Tailholt Avenue) – Commercial/Residential project submitted in December. Concept plan approved at February Board meeting. Preliminary Plat presented at July Planning Commission (forwarded recommendation of approval). The project has been continued to the next available Town Council Meeting after Council comments.
- **Saddler 9 & 10** (Northeast corner of HWY 14 WHY 257) – Approved plan nearing final staff approval (north of HWY14), applicant to print mylars and route for signatures in early 2022.
- **The Reserve** (Southeast corner of WCR72 and WCR 19) – Final Plat submitted in March (resubmittal), the applicant has worked with staff to address comments, to be brought back for public hearings in Mid-2022.